STATE OF NEW HAMPSHIRE
BEFORE THE
PUBLIC UTILITIES COMMISSION

Docket No. DE 19-064

Liberty Utilities (Granite State Electric) Corp. d/b/a Liberty Utilities
Distribution Service Rate Case

REBUTTAL TESTIMONY

OF

JOEL RIVERA

AND

HEATHER M. TEBBETTS

January 30, 2020

THIS PAGE INTENTIONALLY LEFT BLANK

TABLE OF CONTENTS

I. INTRODUCTION AND BACKGROUND 1
II. PURPOSE OF TESTIMONY 2
III. SALEM AREA PROJECTS 2
IV. ASSET CONDITION SALEM DEPOT AND BARRON AVE 19
V. LEAST COST INTEGRATED RESOURCE PLAN (LCIRP) 23
VI. CONCLUSION 32

THIS PAGE INTENTIONALLY LEFT BLANK

I. INTRODUCTION AND BACKGROUND

Q. Mr. Rivera, please introduce yourself.

A. My name is Joel Rivera, my business address is 9 Lowell Road, Salem, New Hampshire, and I am employed by Liberty Utilities Service Corp. I am the Manager of GIS and Electric System Planning for Liberty. I am responsible for managing the Company's electric system capacity, reliability, integrity, interconnections, protection systems, equipment and system upgrades, prioritization, and associated budget estimates. Please see the Direct Testimony of Joel Rivera, Anthony Strabone, and Heather M. Tebbetts, filed April 30, 2019, for a description of my educational background and work experience.

Q. Ms. Tebbetts, please state your full name, business address, and position.

A. My name is Heather M. Tebbetts, my business address is 15 Buttrick Road, Londonderry, New Hampshire, and I am employed by Liberty Utilities Service Corp. I am Manager of Rates and Regulatory Affairs and am responsible for providing rate-related services for the Company. Please see the Direct Testimony of Joel Rivera, Anthony Strabone, and Heather M. Tebbetts, filed April 30, 2019, for a description of my educational background and work experience.

II. PURPOSE OF TESTIMONY

Q. What is the purpose or your testimony?

A. Our testimony is provided in rebuttal to the Staff witnesses Jay E. Dudley and Kurt Demmer related to the topics of planning criteria, Least Cost Integrated Resource Plan ("LCIRP"), and Salem Area Study.

III. SALEM AREA PROJECTS

Q. What is Staff's overall recommendation for the Salem Area?

A. Staff believes that Liberty's planning criteria is too conservative and the proposed loads at Tuscan Village Development are speculative. This position inappropriately disregards all forecasted loading and the 37 criteria violations – exceeding normal rating and exceeding load at risk – identified by Liberty, and downplays the need for major infrastructure improvements needed at Golden Rock and Rockingham to meet the growing demand in the town of Salem. A "criteria violation" occurs when the demands on the system force a particular piece of equipment to operate above the specified limit for normal or contingency loading which poses heightened risk to a large number of customers. The loading limits for normal and contingency loading are specified in the Company's Distribution Planning Criteria.

In addition, Staff believes that the Barron Ave and Salem Depot Substations are adequate for the electric service they are providing[1] and found no evidence of significant

[1] Direct Testimony of Kurt Demmer, Bates Page 26, Lines 11–12.

maintenance, repair, or performance issues,[2] even though Staff did not present testimony of a qualified substation assessor in support of refurbishment.[3]

After discrediting all capacity and asset condition issues in the Salem Area, Staff then recommends serving the Tuscan Village load at 23kV[4] even though it appears Staff lacks granular feeder information and field condition information[5] to make such a determination. Further, given the planned load additions in the area, Liberty identified nine criteria violations for supply line or transformer load at risk for the 23kV system (Table 2, Lines 14–22), which clearly indicate that the 23kV cannot support the addition of 17MW project for the Tuscan Village development. Of these nine 23kV supply violations, six would also be considered in violation using National Grid's former criteria (Table 2, Lines 14–17, 21–22).

Q. Staff claims that the load additions for the Tuscan Village Development are speculative. Are the Tuscan Village investments the subject of this case?

A. No, at least with respect to the 2018 rate base. However, Tuscan Village investments do come into play with respect to the Company's requests for a step adjustment for 2019 capital investments and future step adjustments as part of a Multi-Year Rate Plan.

---

2 Direct Testimony of Kurt Demmer, Bates Page 26, Lines 6–7.
3 Response to Liberty Utilities Set 1 Data Request 1–41.
4 Direct Testimony of Kurt Demmer, Bates Page 28, Lines 3–7.
5 Response to Liberty Utilities Set 1 Data Request 1–37.

Q. Does the Company agree with the Staff's that the Tuscan Village Development load is speculative?

A. No, we do not. The investment necessary to serve the Tuscan Village Development is far from speculative. Liberty meets regularly with the developers to discuss electric service needs and to update loading projections. The loading estimates are determined consistently for all service requests the Company receives and the loading estimated for Tuscan Village was no different. Liberty personnel have many years of utility experience and act in good faith with all customer service requests.

Mr. Demmer considers the loading projections to be speculative and not guaranteed to be in service any time in the near future.[6] Given this position, Staff rejects the load estimates developed for Tuscan Village and ignores Liberty's forecasted planning criteria violations given these load additions.[7]

Q. At which point in the process does Staff consider proposed loads to no longer be speculative?

A. Considering Mr. Demmer's testimony and responses to discovery where he repeatedly referred to the loads at Tuscan Village as speculative, during the technical session held on January 14, 2020, he was asked to clarify at what point expected load should no longer be considered speculative. He stated that the load is no longer speculative once foundations have been poured and distribution transformers have been ordered. This is unrealistic as applied to the Tuscan development given the long lead time needed to construct the

[6] Direct Testimony of Kurt Demmer, Bates page 27, lines 6–7.
[7] Direct Testimony of Kurt Demmer, Bates page 27, lines 16–17

facilities required to supply a development in the range of 17 MW and to meet customer expectations and in-service dates while leveraging some projects to resolve multiple forecasted criteria violations and asset condition of existing equipment. The Company needs to plan and build ahead in order to remain synchronous with developer schedules. Staff has been aware of Liberty's plan for the Salem Area and changes to its planning criteria since 2016.

Q. What are the existing criteria violations in the Salem Area, based on 2019 peak loading conditions?

A. Liberty has identified eight violations to its distribution planning criteria in 2019.

Under normal conditions there are five criteria violations due to feeder or transformer loading levels above 75% of their summer normal rating. Please refer to Table 1 below, lines 1, 4, 6, 8, and 13. There are no violations due to feeder loading levels above 100% of summer normal rating. These five existing violations can be resolved with performing load transfers in the field.

Under contingency conditions, there are three criteria violations due to load at risk. The Pelham 14L1 and 14L2 feeders currently experience load at risk above the 16 MWhr limit with each having a load at risk of 20 and 16.8 respectively. The supply line to Spicket River also experiences load at risk above the 1.5MW/36 MWhr limit, having a load at risk of 11.87MW/160MWhr. The issue with Spicket River load at risk is further explained in this testimony.

It is worth noting that Liberty extended the Pelham 14L4 feeder into the Town of Salem to allow transferring load from Golden Rock to Pelham. In 2019 these transfers started taking place, which resulted in approximately 300A or 6.9 MVA of Golden Rock load transferred to Pelham. Additional transfers from Golden Rock to Pelham are planned for 2020 to create additional capacity on the 13kV and 23kV for Tuscan Village. The Company installed the 14L4 feeder to reduce the load at risk from Golden Rock and to provide additional temporary capacity for Tuscan Village until the Rockingham Substation can be built. Without the Rockingham Substation, the Tuscan Village Development will not be able to fully expand. The existing and forecasted criteria violations (presented below) reflect the 6.9 MVA load transfer from Golden Rock to Pelham.

Q. What are the criteria violations that are forecasted to occur in 2022 given the planned load additions in the Salem Area?

A. There are many criteria violations that are forecasted to occur in 2022 in the Salem Area given the Company's load forecast, planned load additions from the Tuscan Development, and other planned expansions. For a summary of criteria violations that are forecasted to occur in 2022, see the tables below. Table 1 identifies the criteria violations that result under normal operating conditions. Table 2[8] identifies the criteria violations that result under contingency (n-1) conditions.

[8] Information under lines 18, 19, and 22 has been updated as compared to Attachment Staff 1-31.xls provided as Company's response to Staff Technical Session Data Requests - Set 1, 1–31.

Table 1 - Distribution Feeders and Transformers Projected to be ≥ 75% of Summer Normal Rating by the Summer Peak Period of 2022

						2019		2022		
	Study Area	Substation Name	ID	Line kV	SN Rating (Amps)	Actual Load (Amps)	%SN	Projected Load (Amps)	%SN	Risk Score
1	Salem	Olde Trolley	18L2	13.2	503	404	80%	471	94%	30
2	Salem	Olde Trolley	18L3	13.2	515	375	73%	436	85%	30
3	Salem	Olde Trolley	18L4	13.2	516	212	41%	731	142%	48
4	Salem	Pelham	14L2	13.2	530	417	79%	486	92%	30
5	Salem	Pelham	14L4	13.2	530	301	57%	533	101%	36
6	Salem	Salem Depot	9L1	13.2	322	271	84%	375	116%	45
7	Salem	Salem Depot	9L2	13.2	322	224	70%	305	95%	30
8	Salem	Spicket River	13L3	13.2	522	442	85%	515	100%	36
9	Salem	Olde Trolley	TB2	23/13.2	542	402	74%	472	87%	30
10	Salem	Golden Rock	TB1	115/23	2106	1280	61%	1913	91%	30
11	Salem	Olde Trolley	TB3	23/13.2	547	376	69%	437	80%	30
12	Salem	Olde Trolley	TB4	23/13.2	547	337	62%	730	134%	48
13	Salem	Salem Depot	TB1	23/13.2	322	271	84%	376	117%	45
14	Salem	Salem Depot	TB2	23/13.2	322	223	69%	306	95%	30
15	Salem	Spicket River	TB3	23/13.2	608	442	73%	516	85%	30

	Table 2 - Distribution Feeders Projected to be ≥ 16 MWhr, Transformers Projected							
	Study Area	Substation Name	Feeder ID	Line kV	Available Ties (MVA)	Load at Risk (MVA)	Total MWhr Outage	Risk Score
1	Salem	Olde Trolley	18L2	13.2	7.91	2.85	17.3	30
2	Salem	Olde Trolley	18L3	13.2	0.83	9.14	37.2	45
3	Salem	Olde Trolley	18L4	13.2	2.31	14.41	59.4	48
4	Salem	Pelham	14L1	13.2	1.8	6.8	28.65	41
5	Salem	Pelham	14L2	13.2	5.2	5.7	26.76	41
6	Salem	Pelham	14L3	13.2	2.5	4.7	21	37
7	Salem	Pelham	14L4	13.2	2.5	9.73	40.78	48
8	Salem	Salem Depot	9L1	13.2	4.31	4.27	20.33	36
9	Salem	Salem Depot	9L2	13.2	2.53	4.44	19.65	30
10	Salem	Salem Depot	9L3	13.2	3.64	4.58	21.05	36
11	Salem	Spicket River	13L1	13.2	3.17	5.5	24.38	41
12	Salem	Spicket River	13L3	13.2	7.08	4.69	24.1	41
13	Salem	Spicket River	13L2	13.2	3.27	4.44	20.2	36
14	Salem	Golden Rock	TB1	115	3.2	25.3	612.8	48
15	Salem	Golden Rock	G-133	115	3.2	25.3	612.8	48
16	Salem	Methuen Jnct to Golden Rock	2353	23	3.2	12.54	305.6	48
17	Salem	Methuen Jnct to Golden Rock	2376	23	0	12.8	307.2	48
18	Salem	Olde Trolley Tap to Olde Trolley	2352	23	4.76	5.85	140.28	48
19	Salem	Olde Trolley Tap to Olde Trolley	2393	23	4.76	5.85	140.28	48
20	Salem	Golden Rock to Baron Ave Tap	2393	23	3.16	5.64	140	48
21	Salem	Baron Ave tap to Olde Trolley Tap	2393	23	3.16	14.94	363	48
22	Salem	Spicket River Tap to Spicket River	2376	23	5.9	22.2	275	48

Q. Which of criteria violations above directly result from the change to Liberty's previous planning criteria, and what are the Company's plans to address these violations that resulted from a change to the planning criteria?

A. Under normal conditions, the Company identified 15 violations of its new planning criteria in 2022, identified in Table 1 above. Six are violations due to feeder or transformer loading at or above 100 percent of its rating. Nine are violations due to feeder or transformer loading between 75 and 99 percent of their summer normal rating.

These nine would not be considered violations under Liberty's previous criteria and formerly employed at National Grid. However, from these nine violations, only the Golden Rock T1 violation (line 10) is a result of the planned load additions at the Tuscan Development, while the other nine are violations that result from the general area load growth forecast and can be easily resolved by switching. The violation on the Golden Rock T1 due to load at risk cannot be easily resolved without major infrastructure additions at Golden Rock and Rockingham. See Attachment RT-1 for additional details regarding the criteria violations for the Salem Area in 2022 given the planned load additions and forecasted load growth.

Under contingency conditions, there are 22 violations identified for 2022 in Table 2 above. Three are for load at risk that complies with the allowable amount provided in National Grid's previous criteria (240MWhr), but out of compliance with Liberty's updated planning criteria (60MWhr and 36MWhr). See lines 18–20. The remaining 18 violations are out of compliance with both previous and updated planning criteria as they are above 240MWhr. These violations cannot be easily resolved without major infrastructure additions at Golden Rock and Rockingham. These high levels of load at risk are not risks that Liberty is willing to accept given its Corporate vision to continually improve reliability and become "local and responsive" to the communities we serve. As such Liberty will address all identified criteria violations in the Salem Area consistent with its Commission-approved planning criteria and company strategies by expanding the Golden Rock Substation and installing the new Rockingham Substation.

In summary, out of the 37 criteria violations identified in Tables 1 and 2 above for 2022, nine are due to changes in planning criteria for normal loading (75%), and three are due to changes in planning criteria for contingency loading.

Q. What is the estimated cost related to the change to Liberty's Planning Criteria as it relates to the Salem Area, and how does this compare to the Company's previous estimate performed in 2016?

A. This is difficult to estimate given that the proposed projects for Golden Rock and Rockingham address a number of issues as a whole including criteria violations related to normal loading and contingency loading, asset condition, and service delivery to Tuscan Village Development. However, it is possible to estimate the impact that the change to the Planning Criteria will have to the Salem Area by making the following assumptions and observations regarding the proposed scope of projects and forecasted criteria violations:

- Two of three feeders at Golden Rock target to resolve Asset Condition at Baron Ave. One feeder targets a reduction in Load at Risk at Spicket River.
- Three of six feeders at Rockingham target to resolve Asset Condition at Salem Depot. One feeder targets reduction in Load at Risk at Spicket River and two feeders will be dedicated to supply the Tuscan Village Development.
- One of seven reported criteria violations for normal loading conditions result from a change to the planning criteria. Note that eight criteria violations for normal loading are not considered for purposes of this estimate as these eight violations

can be resolved with performing load transfers in the field and will not likely result in capital additions. Three of twenty-one reported criteria violations for contingency loading conditions result from a change to the planning criteria.

Given these assumptions, Liberty estimates the cost of the change in its planning criteria to be approximately $800,000 through the scheduled end of the Rockingham Project in 2023, which is lower than its 2016 estimate of $4.8 million for the Salem Area.

Q. Please provide a summary of the present load at risk at the Spicket River Substation and the forecasted load at risk in 2022 after the proposed load additions in the Salem Area.

A. At present, loss of the 23 kV sub-transmission supply circuit to the Spicket River No.13 Station would result in approximately 11.87 MVA of load at risk, after restorative switching occurs. Liberty relies on the transmission provider, National Grid, to expedite repairs should an outage-related problem occur anywhere along the 4.2 miles of National Grid-owned 2376 sub-transmission line downstream of the 2376/2353 tie. This could cause Liberty to have up to 160 MWHrs of load at risk, for an assumed repair time of 12 hours, which violates Liberty's planning criteria.

In 2022, after planned load additions in the Salem area, loss of the 23 kV sub-transmission supply circuit to the Spicket River No.13 Station would result in approximately 22.2 MVA of load at risk, after restorative switching occurs. This could cause Liberty to have up to 275 MWHrs of load at risk, for an assumed repair time of 12

hours, which violates both Liberty's current planning criteria and National Grid's planning criteria.

Q. What is Staff's position regarding the present load at risk at Spicket River Substation?

A. Staff believes that Liberty's approved planning criteria is too conservative as compared to their preferred 30MW/720MWhr criteria employed at other utilities.[9] Liberty believes that the former planning criteria utilized by National Grid (which was used by Liberty until the Commission approved the current planning criteria in 2017) and the criteria used by Eversource and Unitil are not appropriate for a system the size of Liberty's. According to the former criteria utilized by National Grid, the transmission provider is required to return the failed sub-transmission line to service within 12 hours and is allowed 240 MWHrs of load at risk. A more conservative approach should be taken in Liberty's case since the 23 kV supply line feeding Spicket River Station is a sole source circuit without any contingency sub-transmission backup within Liberty's operating territory. This will eliminate reliance on the transmission provider and allow Liberty to significantly reduce load at risk.

In addition, Staff argues that 13kV distribution ties between Liberty and National Grid should be used in calculation of load at risk,[10] even though these ties are located outside of Liberty's service territory, are of limited capacity (2.5 MVA), and are not guaranteed

[9] Direct Testimony of Kurt Demmer, Bates Page 23, lines 13–18.
[10] Direct Testimony of Kurt Demmer, Bates Page 23, Lines 1–5

during a large scale event. Liberty disagrees with this position, but for the sake of discussion offers the following regarding this additional capacity.

At present, loss of the 23 kV sub-transmission supply circuit to the Spicket River No.13 Station would result in approximately 9.1 MVA of load at risk, after restorative switching occurs including transfers to National Grid. This could cause Liberty to have up to 131 MWHrs of load at risk, for an assumed repair time of 12 hours, which still violates Liberty's planning criteria.

Q. Have there been any recent outages along the 4.2 miles of National Grid's transmission owned 2376 line that supplies Spicket River?

A. Yes. During Winter Storm Quinn (March 7–11, 2018), National Grid's transmission line that supplies Spicket River lost power, resulting in delays to restoring power to the customers. Following this major event the Public Utilities Commission stated the following:

> The Commission also notes that Liberty's restoration efforts were 25% longer in duration than those of other utilities, and that the Town of Salem was the only community in New Hampshire that needed to open a shelter during the event due to the cold temperatures experienced during the extended power outage. In order to improve the Company's future restoration efforts, the Commission has determined that the completion of a self-assessment would be useful to the Commission as well as the Company.

See Attachment RT-2, *Winter Storm Quinn – March 2018 After Action Report for Liberty Utilities*. Some of the relevant issues presented by the Commission were as follows:

- Liberty's attempt to facilitate restoration with National Grid of the 23kV supply line originating at Pie Hill in Methuen and providing power to the Spicket River Substation.
- The Commission's understanding is that the restoration of that substation feed would significantly restore the affected circuits out of the Spicket River substation and shorten outage durations in the North Main Street and Main Street areas accordingly.
- Restoration efforts coordinated with National Grid, including switching attempts employed by Liberty to restore power within Liberty's distribution system in lieu of National Grid's prolonged restoration efforts.

This is the same contingency scenario that Liberty is attempting to mitigate at Spicket River. After Quinn, it was clear to Liberty that the Commission was not pleased with the prolonged restoration times due to lack of feeder ties, delays in returning National Grid's line back to service, and the difficulties in communicating with National Grid during this major event. It is unclear why Staff now believes that the present load at risk condition at Spicket River is no longer an issue because our planning criteria for load at risk is too conservative.

Q. What is Staff's estimate for the Tuscan Village Development ultimate loading?

A. Staff estimates the ultimate load at Tuscan Village to be approximately 12 MW[11], although that is speculative given that the estimate is based on the South side of the development having approximately 3-4 times the buildings that the North side contains.[12]

Liberty disagrees with this assumption but, for purposes of comparison, offers the following. Assuming a peak load of 12MW for Tuscan Village, nearly all of the planning violations discussed above under a peak load of 17MW will still occur. Tables 1 and 2 above have been modified to include a comparison between 17MW and 12MW load projection for Tuscan Village. See Tables 3 and 4, respectively.

[11] Response to Liberty Utilities Set 1 Data Request 1–43
[12] Direct Testimony of Kurt Demmer, Bates Page 27, lines 1–2

Table 3 - Distribution Feeders and Transformers Projected to be ≥ 75% of Summer Normal Rating by the Summer Peak Period of 2022

						2019		2022 - 17 MW		2022 - 12 MW	
	Study Area	Substation Name	ID	Line kV	SN Rating (Amps)	Actual Load (Amps)	%SN	Projected Load (Amps)	%SN	Projected Load (Amps)	%SN
1	Salem	Olde Trolley	18L2	13.2	503	404	80%	471	94%	471	94%
2	Salem	Olde Trolley	18L3	13.2	515	375	73%	436	85%	436	85%
3	Salem	Olde Trolley	18L4	13.2	516	212	41%	731	142%	556	108%
4	Salem	Pelham	14L2	13.2	530	417	79%	486	92%	486	92%
5	Salem	Pelham	14L4	13.2	530	301	57%	533	101%	533	101%
6	Salem	Salem Depot	9L1	13.2	322	271	84%	375	116%	375	116%
7	Salem	Salem Depot	9L2	13.2	322	224	70%	305	95%	305	95%
8	Salem	Spicket River	13L3	13.2	522	442	85%	515	100%	515	100%
9	Salem	Olde Trolley	TB2	23/13.2	542	402	74%	472	87%	472	87%
10	Salem	Golden Rock	TB1	115/23	2106	1280	61%	1913	91%	1812	86%
11	Salem	Olde Trolley	TB3	23/13.2	547	376	69%	437	80%	437	80%
12	Salem	Olde Trolley	TB4	23/13.2	547	337	62%	730	134%	556	102%
13	Salem	Salem Depot	TB1	23/13.2	322	271	84%	376	117%	376	117%
14	Salem	Salem Depot	TB2	23/13.2	322	223	69%	306	95%	306	95%
15	Salem	Spicket River	TB3	23/13.2	608	442	73%	516	85%	516	85%

	Table 4 - Distribution Feeders Projected to be ≥ 16 MWhr, Transformers Projected to be ≥ 60 MWhr, Supply Lines Projected to be ≥ 36 MWhr of Load at Risk by the Summer Peak Period of 2022									
					2022 - 17 MW			2022 - 12 MW		
	Study Area	Substation Name	Feeder ID	Line kV	Available Ties (MVA)	Load at Risk (MVA)	Total MWhr Outage	Available Ties (MVA)	Load at Risk (MVA)	Total MWhr Outage
1	Salem	Olde Trolley	18L2	13.2	7.91	2.85	17.3	7.91	2.85	17.3
2	Salem	Olde Trolley	18L3	13.2	0.83	9.14	37.2	2.8	7.1	30.7
3	Salem	Olde Trolley	18L4	13.2	2.31	14.41	59.4	2.3	10.4	43.3
4	Salem	Pelham	14L1	13.2	1.8	6.8	28.65	1.8	6.8	28.65
5	Salem	Pelham	14L2	13.2	5.2	5.7	26.76	5.2	5.7	26.76
6	Salem	Pelham	14L3	13.2	2.5	4.7	21	2.5	4.7	21
7	Salem	Pelham	14L4	13.2	2.5	9.73	40.78	5.46	6.73	31
8	Salem	Salem Depot	9L1	13.2	4.31	4.27	20.33	4.31	4.27	20.33
9	Salem	Salem Depot	9L2	13.2	2.53	4.44	19.65	2.53	4.44	19.65
10	Salem	Salem Depot	9L3	13.2	3.64	4.58	21.05	3.64	4.58	21.05
11	Salem	Spicket River	13L1	13.2	3.17	5.5	24.38	3.17	5.5	24.38
12	Salem	Spicket River	13L3	13.2	7.08	4.69	24.1	7.08	4.69	24.1
13	Salem	Spicket River	13L2	13.2	3.27	4.44	20.2	3.27	4.44	20.2
14	Salem	Golden Rock	TB1	115	3.2	25.3	612.8	3.2	21.2	514
15	Salem	Golden Rock	G-133	115	3.2	25.3	612.8	3.2	21.2	514
16	Salem	Methuen Jnct to Golden Rock	2353	23	3.2	12.54	305.6	3.2	12.54	305.6
17	Salem	Methuen Jnct to Golden Rock	2376	23	0	12.8	307.2	**0**	**8.7**	**208.8**
18	Salem	Olde Trolley Tap to Olde Trolley	2352	23	4.76	5.85	140.28	**4.76**	**1.85**	**51.27**
19	Salem	Olde Trolley Tap to Olde Trolley	2393	23	4.76	5.85	140.28	**4.76**	**1.85**	**51.27**
20	Salem	Golden Rock to Baron Ave Tap	2393	23	3.16	5.64	140	**3.16**	**1.64**	**43.9**
21	Salem	Baron Ave tap to Olde Trolley Tap	2393	23	3.16	14.94	363	3.16	10.94	267
22	Salem	Spicket River Tap to Spicket River	2376	23	5.9	22.2	275	5.9	22.2	275

Under normal operating conditions seen in Table 3 above, violations under lines 3, 10, and 12 improve but are still in violation of Liberty's planning criteria. Feeders that were previously forecasted to be loaded above 100% of their normal rating are still forecasted to be above 100% (Table 3 - Lines 3 and 12). Feeders that were previously forecasted to be loaded to above 75% are still above 75% (Table 3 – Line 10). Out of 15 violations when one assumes a 17MW load, *all* remain in violation of Liberty's Planning Criteria when the Tuscan load estimate is reduced to 12MW.

Under Contingency conditions seen in Table 4 above, there are improvements to the violations listed under lines 2, 3, 7, 14, 15, and 17 through 21, but they are still in violation of Liberty's planning criteria. Feeders that were previously forecasted to have over 16 MWhr of load at risk (Table 4, Lines 1–13), still are forecasted to be over 16 MWhr. The Golden Rock Transformer (Table 4, Line 14) is still forecasted to have load at risk in excess of Liberty's and National Grid's planning criteria. The supply lines (Table 4, Line 15–22) are also still forecasted to have load at risk in excess of Liberty's planning criteria for supply lines (36 MWhr). As mentioned, the forecasted supply line contingency violations on Table 4, lines 18–20, are within National Grid's criteria. The major benefit to a 12MW load projection for Tuscan Village is for violations listed on Table 4, lines 18–20. These results are very close to Liberty's criteria of 36 MWhr for supply lines. Out of 22 violations, *all* remain in violation of Liberty's Planning Criteria.

The results above indicate that a load projection comparison between 12MW and 17MW for Tuscan Village ultimately has little effect on the overall impact to the distribution system. This comparison also indicates that the distribution system is nearly at the tipping point where major infrastructures are needed to support future load growth and customer expansions in the area and that, even with a 12MW load forecast for Tuscan, the project needs and drivers remain the same given minimal improvement to the violations.

IV. ASSET CONDITION SALEM DEPOT AND BARRON AVE

Q. Please summarize the asset conditions that exist at Salem Depot and Barron Ave Substations.

A. As discussed with Staff during the 2016 rate case proceedings, the existing substation assets at Barron Avenue and Salem Depot have exceeded both their useful operating lives and their useful economic lives.[13] The Company has conducted an asset review at each location, and determined those assets are in need of replacement in the near future, which is the case regardless of future load growth. Those assets are continuing to deteriorate. The piece-out replacement of individual components at these locations does not make good economic sense for a number of reasons, including the limited size and location of the substations; the limited capacity of the equipment; their reliance on sub-transmission supply; the condition of electrical equipment; clearance requirements; access and abutter concerns; vintage control, data, and protection equipment; contingency sparing, and response. Expansion at these locations is not considered a viable option.

In Docket No. DE 16-383, in its response to Staff 4-51, the Company provided the following: Barron Avenue was initially constructed in the early 1960s. There are a substantial number of asset condition and operability issues of concern at Barron Avenue. Its capacity is limited by modular transformers supplied via a 23kV sub-transmission system. The Salem Depot substation is somewhat older, initially constructed in the mid-1950s, with similar or worse asset condition concerns, and with similar transformation

[13] DE 16-383, Company's response to Staff 4-37.

and supply constraints. To varying degrees, there are asset condition, maintenance, and operating issues with most groupings of equipment at both Barron Avenue and Salem Depot. Simply replacing discrete pieces or groupings of equipment would not be feasible due to the multiple equipment deficiencies at the substations. Maintaining, repairing, or replacing the assets in their existing location and configuration, while possible, are typically costly and would not be expected to yield a significant improvement in the overall reliability or operability of the substation. Due to the design and overall condition of the steel, foundations, bus, switches, and control houses, both substations would require significant rebuild in situ. Prior experience retrofitting vintage modular or box structure substations supports the notion that retrofit costs can quickly escalate. Typically, such projects do not result in improved reliability or additional capacity due to the supply system and/or space constraints. In the case of Barron Avenue, the substation is located in a residential neighborhood and Granite State has dealt with abutter concerns for decades. Salem Depot is located in a dense commercial/residential area, making maintenance access and equipment replacement a significant challenge. Significant expansion from Tuscan Village further complicates the approach to asset condition, reliability, and capacity solutions at both sites.

The most apparent solution is to replace, over time, the functionality of both the Barron Avenue and Salem Depot assets with modern distribution facilities from a transmission system supplied substation, as close to the Salem load center as possible. The Company has evaluated additional capacity from the existing Golden Rock substation and a future

Rockingham substation as the preferred phased alternative to rebuilding the Barron Avenue and Salem Depot substations.

Both the Barron Avenue and Salem Depot substations are modular design substations, built in the 1950s and 1960s in dense residential/small commercial locations.[14] Prior experience with substations of this design and vintage has revealed that rebuilding the facilities with new feeder positions, including a transformer, can approach $1M. The investment is often constrained by supply system limitations stemming from conductor thermal limitations, voltage, and reliability performance. Further, overall substation capacity is typically capped, again limited by upstream supply limitations. Construction and outage coordination also become challenging and costly. The preferred path, wherever possible, is to provide new capacity from a modern design, 115/13kV substation. Feeder positions typically cost less than $500k and can usually take advantage of supply and transformer capacity exceeding 60 MVA or more. They further offer notable reliability and operating improvements over modular designs. Therefore, given the age and condition of the Barron Avenue and Salem Depot facilities, their locations, and the phased approach to utilizing 115/13kV substation capacity at Golden Rock and eventually a new substation at Rockingham, we did not pursue rebuilds of the Barron Avenue and Salem Depot substations beyond the preliminary discussions of possible options.

[14] DE 16-383, Company's response to Staff 8-84.

See Attachment RT-3 for a summary of equipment concerns at the Barron Ave and Salem Depot substations.

There are a large number of equipment condition concerns at the Barron Avenue Station. The 10L1 equipment ranges from 57 years in service to 31 years in service. The transformer is 57 years old (as of 2006, 2 of 31 transformers of this type have failed at National Grid). The 13.2 kV recloser is 45 years old; this model is known to have a higher than normal failure rate. The three individual regulators are 31 years old with tap change counters over 127,400, 270,000 and 197,100. Each component on this feeder is approaching its end of life.

The 10L2 equipment ranges from 19 years in service to 16 years in service.

The 10L4 equipment ranges from 50 years in service to 38 years in service. The transformer is 48 years old (as of 2006 - 5 of 28 transformers of this type have failed at National Grid). The 13.2 kV recloser is 50 years old and is no longer supported by the manufacturer, and this model is known to have a higher than normal failure rate. The three individual regulators are 38 years old with tap change counters over 421,200, 542,500 and 559,700. Each component on this feeder is approaching its end of life.

There are also a large number of equipment condition concerns at the Salem Depot Station. The 9L1 equipment ranges from 68 years in service to 10 years in service. The transformer is 51 years old. The 13.2 kV oil circuit breaker (OCB) is 68 years old. OCBs of this vintage require an above average maintenance interval. The three individual

regulators are 10 years old with tap change counters over 202,200, 104,900, and 107,900. The transformer and OCB on this feeder are approaching their end of life.

The 9L2 equipment ranges from 65 years in service to 16 years in service. The 13.2 kV recloser is 43 years old. The three individual regulators are 38 years old with tap change counters over 98,000, 142,800 and 121,600 (this unit requires untanking to repair a failed internal motor capacitor). The transformer and recloser are approaching their end of life.

The 9L3 equipment ranges from 47 years in service to 13 years in service. The transformer is 30 years old. The H3 bushing needs replacement due to poor power factor testing results. The13.2 kV recloser is 13 years old. The individual regulators are 47 years old and 32 years old with tap change counters over 187,500, 217,100, and 196,800. The regulators on this feeder are approaching their end of life.

V. <u>LEAST COST INTEGRATED RESOURCE PLAN (LCIRP)</u>

Q. Does Staff address LCIRP issues being adjudicated in Docket No. DE 19-120 in its testimony?

A. Yes. The Company is unsure why Staff's testimony addresses issues in the LCIRP as they are not the subject of this rate case. As Staff felt it necessary to address these issues, we provide this responsive testimony.

Q. What are the specific deliverables contained in Commission Order No. 26,261?

A. There are two main deliverables contained in Commission Order No. 26,261 (June 4, 2019), which "grant[ed] Liberty Utilities a partial waiver of its 2019 Least Cost Integrated Resource Plan filing requirement" in light of the "Staff Recommendation on

Grid Modernization …in which Commission Staff (Staff) recommended that electric distribution utilities file an 'integrated distribution plan' (IDP) that would be more comprehensive and transparent than an LCIRP," and which "direct[ed] the Company to file a more limited document." The first deliverable requires confirmation that the utility is currently following the process of system planning using established procedures, criteria, and policies outlined in its 2016 LCIRP, and achieving the objectives included its 2016 LCIRP. The second deliverable requires copies of adopted standard operating procedures for employees and managers integrating day-to-day and long-term planning consistent with the Company's objectives of Least Cost Planning.

Q. Is the Company currently following the process of system planning using established procedures, criteria and policies outlined in its 2016 LCIRP?

A. Yes. The process of system planning as described in Section 4.4 of Liberty's 2016 LCIRP, which includes changes to its previous criteria, are being followed. In summary they include the following tasks:

- Forecast peak demand using an econometric model, which includes projected customer and demand growth;
- Review and evaluate system performance using Company's criteria and policies, which includes: (a) capacity loadings for forecasted peak loads vs. ratings; (b) reliability; (c) asset condition; and (d) power quality and voltage performance;
- Implement strategies for Planning Criteria, Area Strategy, and Asset Strategy;

- Identify and prioritize system deficiencies that need addressing which includes consideration of system flexibility in response to various contingency scenarios;
- Identify wires and non-wires solutions, reflecting the guidelines for non-wires solutions and perform evaluation of solutions;
- Decide on solutions that best meet distribution planning goals; and
- Develop proposals for system enhancement projects

Throughout this rate case proceeding and the ongoing LCIRP proceeding, Docket No. DE 19-120, Liberty has provided confirmation to Staff on the above tasks. To argue the contrary, Mr. Demmer claims the Company has not satisfied the requirements of Commission Order No. 26,261 due to a change in its distribution transformer rating criteria,[15] although the short term capital budget impact due to this change is relatively minor as compared to the subtransmission line, substation transformer, and distribution circuit planning criteria that were lowered in the 2016 LCIRP.[16] Even though the Company disagrees with this claim, Liberty has provided corrected ratings to its distribution transformers as part of the LCIRP proceedings. In response to Liberty's Data Request 1-27, Mr. Demmer noted the following: "In Liberty's response to Staff data request 3-4 in Docket No. DE 19-120, filed on 12/19/19 (after Staff's testimony was filed in Docket No. DE 19-064), the Company has corrected the distribution transformer capacity criteria for three-phase padmounted transformers which would allow for a higher capacity rating of the unit reducing the overall cost impact for three-phase

[15] Direct Testimony of Kurt Demmer, Bates Page 11, Lines 1-4.
[16] Direct Testimony of Kurt Demmer, Bates Page 10, Lines 7-9.

padmounts as testified in Bates 10 lines 9 through 12." Liberty considers this issue resolved and thus in compliance with the first deliverable of the LCIRP.

Q. Regarding the second deliverable, has the Company provided copies of adopted standard operating procedures for employees and managers integrating day-to-day and long-term planning?

A. Yes. As part of the 2019 filing, the Company provided construction standards, distribution planning criteria, electric operating procedures, and strategy documents used by employees integrating day to day and long term planning. In his testimony, Mr. Demmer claims that the Company has not fulfilled this requirement as it has not provided substation maintenance procedures and standards that would be necessary to evaluate whether the Company has adopted standard operating procedures for employees and managers[17]integrating day to day and long term planning. The Company explained to Staff that these polices are in the process of being updated and once completed, will be provided.

Q. Please summarize the changes that were made to the planning criteria in 2016 and explain the reasons for those changes.

A. The 2016 changes to the planning criteria were presented to Staff in Docket No. DE 16-097 and later approved by the Commission in Order No. 26,039 (July 10, 2017). They were also described in the Rebuttal Testimony of Christian Brouillard, Director of Engineering, in Docket No. DE 16-383, the Company's last rate case.

[17] Direct Testimony of Kurt Demmer, Bates Page 11, Lines 10-14.

As explained in the 2016 LCIRP proceeding, and in Mr. Brouillard's testimony in the prior rate case, when Liberty Utilities acquired the Company in 2012, Liberty made a commitment to its customers, communities, and the Commission to be a locally managed company, responsive to the needs of our customers and to the communities in which we operate. The Company also committed to invest in delivery system projects in a manner consistent with this strategy. In the short run, this meant initiating and completing the projects that National Grid identified, but never started. In the longer term, this commitment meant developing a system design criteria that would appropriately manage the day-to-day, contingency, and storm operating risks for a stand-alone utility of our geographical makeup and resource base. Unlike National Grid or one of the other neighboring utilities, Liberty has a limited number of crews available for response to system outages and contingencies. In contrast, National Grid had an extensive resource base extending from Western New York to Eastern Massachusetts, and locally, significant line and substation resources available from nearby Massachusetts. Also, National Grid had spare substation and overhead/underground line equipment available to New Hampshire within a matter of hours. Without a significant increase to its non-in-service inventory, Liberty no longer has such access to spare equipment.

Therefore, to meet its commitments, Liberty chose to change its system design criteria to better manage its forward operating risks, and to allow for improved response and flexibility to contingencies as well as to customer growth and load increases. Comparing Liberty's planning criteria to that of National Grid or another nearby large utility is thus unwise and inappropriate. Requiring Liberty to evaluate its system investments using

National Grid's planning criteria is also unreasonable and inefficient. As an example, using National Grid's planning criteria, a 24-hour outage to approximately 2,000 customers resulting from a 23kV/13kV transformer failure would be acceptable. A sub transmission (23kV) line outage impacting 4,000 customers and lasting 12 hours would also be acceptable. Such planning and operating constraints are not acceptable to Liberty, nor are they consistent with our aforementioned customer strategy. Although a utility the size and scope of National Grid has the robust response capabilities to be able to respond to such large outages, a utility of Liberty's limited size and scope simply cannot respond in the same timeframe to these contingencies.

One can better appreciate Liberty's operating constraints and need for revised design criteria by thinking of the Company as two utilities, one in the Salem area and one in Lebanon. Like a smaller utility, with limited labor and material resources, Liberty's reliability focus has shifted to prevention through the installation of spacer cable, and our system contingency planning has shifted to one placing a greater emphasis on redundancy. That is, given Liberty's reduced response capability and spare parts inventory compared to what it enjoyed as a member of the National Grid family, the prudent course is to focus on prevention and redundancy.

In the 2016 rate case proceedings, the Company validated the changes to its planning criteria and the reasoning behind the changes. The criteria are entirely appropriate for a utility of Liberty's size, scope, and customer commitments; reverting back to National Grid's criteria is not appropriate. Nor is it appropriate or efficient to require dual

analyses of the projects against both National Grid and Liberty criteria as part of a cost-recovery filing. After a through discussion of these issues during the hearing on the 2016 LCIRP, the Commission agreed with the Company and approved the new planning criteria in Order No. 26,039 as part of its overall approval of the LCIRP.

For a summary of changes to the planning criteria, refer to the table below:

New Criteria	Previous Criteria	Reason for Change
During normal operation, all distribution feeders to remain within 75% of normal ratings.	During normal operation, all distribution feeders to remain within 100% of normal ratings.	Allows for adequate capacity on adjacent lines to restore load post-contingency and reflects Liberty's strategy to proactively plan for sufficient capacity to meet changes in demand.
During normal operation, all sub-transmission lines to remain within 90% of normal ratings.	During normal operation, all sub-transmission lines to remain within 100% of normal ratings.	Allows for adequate capacity on adjacent lines to restore load post-contingency and reflects Liberty's strategy to proactively plan for sufficient capacity to meet changes in demand.
During normal operation, all transformers to remain within 75% of normal ratings.	During normal operation, all transformers to remain within 100% of normal ratings.	Reflects Liberty's strategy to proactively plan for sufficient capacity to meet changes in demand.
For the loss of a distribution feeder, if more than 16MWhrs of load at risk results for a single feeder fault evaluate alternatives to mitigate.	No Change.	Existing targets are adequate given size of a typical Liberty distribution feeder.
For the loss of a sub-transmission supply line, the quantity of load at risk of being out of service following post contingency switching should be limited to 1.5MW combined. If more than 36MWhrs of load at risk results for a single line fault evaluate alternatives to mitigate.	For the loss of a sub-transmission supply line, the quantity of load at risk of being out of service following post contingency switching should be limited to 20MW combined. If more than 240MWhrs of load at risk results for a single line fault evaluate alternatives to mitigate.	Reflects Liberty's strategy and scale of facilities.
For the loss of a transformer, the quantity of load at risk of being out of service following post contingency switching should be limited to 2.5MW combined. If more than 60MWhrs of load at risk results for a single line fault evaluate alternatives to mitigate.	For the loss of a transformer, the quantity of load at risk of being out of service following post contingency switching should be limited to 10MW combined. If more than 240MWhrs of load at risk results for a single line fault evaluate alternatives to mitigate.	Reflects Liberty's strategy and scale of facilities.
Every effort must be made to return the failed sub-transmission line to service within 12 hours.	Every effort must be made to return the failed sub-transmission line to service within 24 hours.	Establishes a new limit for repairing feeder faults on Liberty's distribution feeders.
N/A	Every effort must be made to return the failed distribution feeder to service within 24 hours.	Establishes a new limit for repairing feeder faults on Liberty's distribution feeders.
In general, and whenever practical, each feeder should have three feeder ties to neighboring feeders.	N/A	Reflects Liberty's strategy to increase operating flexibility and support improved reliability performance due to faster service restoration times and future implementation of distribution automation.
Distribution feeders should be limited to 2,500 customers and sectionalized such that the number of customers does not exceed 500 or 2,000kVA of load between disconnecting devices.	N/A	Reflects Liberty's strategy to increase operating flexibility and support improved reliability performance due to faster service restoration times and future implementation of distribution automation.

Q. Have the changes to Liberty's Distribution Planning Criteria received regulatory approval?

A. Yes. As mentioned above, the Commission approved changes to Liberty's Distribution Planning Criteria in 2016 as part of Docket No. DE 16-097, Least Cost Integrated Resource Plan. Order No. 26,039 (July 10, 2017).

Q. Since the approval of the changes to Liberty's Planning Criteria as part of its Least Cost Integrated Resource Plan in 2016, how much has Liberty spent to date addressing issues that can be directly attributed to a change in the planning criteria?

A. Liberty has not undertaken any projects to resolve a criteria violation that resulted from a change to its planning criteria. Thus, it is irrelevant to the costs to be recovered in this case whether the planning criteria should remain as approved by the Commission in 2017 or modified going forward. Specifically, no costs in this case were incurred to comply with the heighted planning criteria approved in 2017.

Q. What is Staff's view on load at risk as it relates to transformers and supply lines?

A. During the technical session held on January 14, 2020, Staff indicated that they envision Unitil, Eversource, and Liberty to all have the same planning criteria and reliability targets. Mr. Demmer's testimony compared the planning criteria for the three utilities[18] and noted that the load at risk for Unitil and Eversource is 30MW for up to 24 hours, which could result in 720 MWhr of load at risk. However, Mr. Demmer did not compare

[18] Direct Testimony of Kurt Demmer, Bates 13, line 1.

sizes of transformers that each utility typically employs in their distribution system or the amount of customers served for each utility. While a criteria of 30MW/720MWhr might be adequate for a utility that employs larger sized transformers and of larger scale resources, it is not appropriate for Liberty's system given that all Liberty-owned transformers are between 7.5MVA and 9.375MVA and supply fewer customers as compared to the other utilities in New Hampshire. To understand the impact to Liberty, consider a hypothetical loss of supply to the Spicket River Substation for 24 hours. The Spicket River Substation roughly represents the magnitude of load at risk that Staff envisions for Liberty (30 MW/720 MWhr).[19] Spicket River Substation is loaded to about 24MW and serves 6,855 Customers. The hypothetical loss of this substation would result in a loss of power to 15% of Liberty's customers and a SAIDI of 219 minutes, which is more than the Company's SAIDI performance for 2018 and 2019 combined (192 minutes). Liberty's approved Distribution Criteria was intentionally refined from that of National Grid, the former owner, to reflect the operating parameters of Liberty's smaller distribution footprint and resource base. It is unlikely that the expansions of the Mount Support and Pelham substations, completed by the Company within this rate period, would be justifiable given a criteria that allows 30 MW of load at risk for 24 hours.

VI. <u>CONCLUSION</u>

Q. Does this conclude your testimony?

A. Yes.

[19] Direct Testimony of Kurt Demmer, Bates page 19, lines 8–9.

2022	DISTRIBUTION LINE						DISTRIBUTION SUB			SUPPLY LINE				
AREA	FEEDER NORMAL LOADING 75-100%	FEEDER NORMAL LOADING > 100%	FEEDER CONTINGENCY LOADING 16MWHR	FEEDER CUSTOMERS ABOVE 2500	500 CUSTOMERS OR 2,000KVA BETWEEN DISC	FEEDER HAS LESS THAN 3 FEEDER TIES	TRANSFORMER NORMAL LOADING 75-100%	TRANSFORMER NORMAL LOADING > 100%	TRANSFORMER CONTINGENCY LOADING 2.5MW/60MWHR	SUPPLY LINE NORMAL LOADING 90-100%	SUPPLY LINE NORMAL LOADING > 100%	SUPPLY LINE CONTINGENCY LOADING 1.5MW/36MWHR	VIOLATION MITIGATION	IMPACT FROM CHANGES TO PLANNING CRITERIA
BARRON AVENUE 10L1	NONE	NONE	NONE	NONE	NONE	YES	NONE	NONE	NONE	N/A	N/A	N/A	**Asset retirement** - Install Golden Rock 19L8 and 19L6 feeders.	None
BARRON AVENUE 10L2	NONE	NONE	NONE	NONE	NONE	NONE	NONE	NONE	NONE	N/A	N/A	N/A	**Asset retirement** - Install Golden Rock 19L8 and 19L6 feeders.	None
BARRON AVENUE 10L4	NONE	NONE	NONE	NONE	NONE	YES	NONE	NONE	NONE	N/A	N/A	N/A	**Asset retirement** - Install Golden Rock 19L8 and 19L6 feeders.	None
OLDE TROLLEY 18L1	NONE	NONE	NONE	NONE	NONE	YES	NONE	NONE	NONE	N/A	N/A	N/A	None	None
OLDE TROLLEY 18L2	YES	NONE	YES	NONE	NONE	NONE	YES	NONE	NONE	N/A	N/A	N/A	**75-100% SN** - Install new DA switchgear at Mall and transfer Switchgear B to 18L1. (2019 DA program) **16MWhr** - Install new Golden Rock 19L6/19L4 feeders	None. Distribution Automation Project will install automated switchgear which will also reduce loading to within 75% of SN. 16MWhr violation applies to original criteria.
OLDE TROLLEY 18L3	YES	NONE	YES	NONE	NONE	NONE	YES	NONE	NONE	N/A	N/A	N/A	**75-100% SN -** Transfer portion of Industrial Way load to 14L4 **16MWhr** - Install Rockingham 21L7/21L8 feeders	None. Will perform switching to reduce loading within 75% of SN. 16MWhr violation applies to original criteria.
OLDE TROLLEY 18L4	NONE	YES	YES	NONE	NONE	YES	NONE	YES	NONE	N/A	N/A	N/A	**> 100% SN** - Install Rockingham feeders 21L7/21L8 feeders to supply Tuscan Dev **16 MWhr** - Install Rockingham 21L7/21L8 feeders	None - Violations apply to original criteria
PELHAM 14L1	NONE	NONE	YES	NONE	NONE	YES	NONE	NONE	NONE	N/A	N/A	N/A	**16 MWhr** - Install new Pelham 14L5 feeder	None - Violations apply to original criteria
PELHAM 14L2	YES	NONE	YES	NONE	NONE	NONE	NONE	NONE	NONE	N/A	N/A	N/A	**75-100% SN** - Transfer portion of Sherburne Rd to 14L1. **16 MWhr** - Install new Pelham 14L5 feeder	None. Will perform switching to reduce loading within 75% of SN. 16MWhr violation applies to original criteria.
PELHAM 14L3	NONE	NONE	YES	NONE	NONE	NONE	NONE	NONE	NONE	N/A	N/A	N/A	**16 MWhr** - Install Rockingham 21L7/21L8.	None - Violation applies to original criteria
PELHAM 14L4	NONE	YES	YES	NONE	NONE	NONE	NONE	NONE	NONE	N/A	N/A	N/A	**> 100% SN** - Install Rockingham feeders 21L7/21L8 feeders to supply Tuscan Dev **16 MWhr** - Install Rockingham 21L7/21L8 feeders	None - Violations apply to original criteria
PELHAM 14L5	N/A	N/A	N/A	N/A	N/A	N/A	N/A	N/A	N/A	N/A	N/A	N/A	N/A	N/A
SALEM DEPOT 9L1	NONE	YES	YES	NONE	NONE	NONE	NONE	YES	YES	N/A	N/A	N/A	**> 100% SN** - Install one Rockingham sub 21L1 feeder **16 MWhr** - Install one Golden Rock 19L4 feeder **Asset retirement** - Install one Rockingham sub 21L1 feeder	None - Violations apply to original criteria
SALEM DEPOT 9L2	YES	NONE	YES	NONE	NONE	YES	YES	NONE	YES	N/A	N/A	N/A	**75 - 100% SN** - Transfer portion of Main St to 9L3. **16 MWhr** - Install one Rockingham 21L6 feeder **Asset retirement** - Install one Rockingham sub 21L6 feeder	None. Will perform switching to reduce loading within 75% of SN if needed. 16MWhr violation applies to original criteria.
SALEM DEPOT 9L3	NONE	NONE	YES	NONE	YES	NONE	NONE	NONE	NONE	N/A	N/A	N/A	**16 MWhr** - Install Rockingham 21L5 feeder. **Asset Retirement** - Install Rockingham 21L5 feeder	None - Violation applies to original criteria
SPICKET RIVER 13L1	NONE	NONE	YES	NONE	NONE	YES	NONE	NONE	NONE	N/A	N/A	N/A	**16 MWhr** - Install one Golden Rock 19L4 feeder.	None - Violation applies to original criteria
SPICKET RIVER 13L2	NONE	NONE	YES	NONE	YES	NONE	NONE	NONE	NONE	N/A	N/A	N/A	**16 MWhr** - Install one Golden Rock 19L4 feeder.	None - Violation applies to original criteria
SPICKET RIVER 13L3	YES	YES	YES	NONE	YES	NONE	YES	NONE	NONE	N/A	N/A	N/A	**> 100% SN** - Install one Golden Rock 19L4 feeder **16 MWhr** - Install one Golden Rock 19L4 feeder	None - Violations apply to original criteria
GOLDEN ROCK 2393	N/A	N/A	N/A	N/A	N/A	N/A	N/A	N/A	N/A	NONE	NONE	YES	**363 MWhr** - Expand Golden Rock Substation and Install Rockingham Substation	None - Violation applies to original criteria
GOLDEN ROCK 2352	N/A	N/A	N/A	N/A	N/A	N/A	N/A	N/A	N/A	NONE	NONE	YES	**93 MWhr** - Expand Golden Rock Substation and Install Rockingham Substation	Violation due to change in planning criteria - supply line contingency loading
SPICKET RIVER 2376	N/A	N/A	N/A	N/A	N/A	N/A	N/A	N/A	N/A	NONE	NONE	YES	**307 MWhr** - Install one Golden Rock 19L4 feeder Install Rockingham Substation	None - Violation applies to original criteria
GOLDEN ROCK T1	N/A	N/A	N/A	N/A	N/A	N/A	YES	N/A	YES	N/A	N/A	N/A	**75-100% SN -** Expand Golden Rock Substation **613 MWhr** - Expand Golden Rock Substation and Install Rockingham Substation	Violation due to change in planning criteria - 75% SN None - Violation applies to original criteria
GOLDEN ROCK 2353	N/A	N/A	N/A	N/A	N/A	N/A	N/A	N/A	N/A	NONE	NONE	YES	**306 MWhr** - Expand Golden Rock Substation and Install Rockingham Substation	None - Violation applies to original criteria
GOLDEN ROCK 2376	N/A	N/A	N/A	N/A	N/A	N/A	N/A	N/A	N/A	NONE	NONE	YES	**306 MWhr** - Expand Golden Rock Substation and Install Rockingham Substation	None - Violation applies to original criteria
GOLDEN ROCK G133	N/A	N/A	N/A	N/A	N/A	N/A	N/A	N/A	N/A	N/A	N/A	YES	**613 Mwhr** - Expand Golden Rock Substation and Install Rockingham Substation	None - Violation applies to original criteria

CHAIRMAN
Martin P. Honigberg

COMMISSIONERS
Kathryn M. Bailey
Michael S. Giaimo

EXECUTIVE DIRECTOR
Debra A. Howland

THE STATE OF NEW HAMPSHIRE

PUBLIC UTILITIES COMMISSION
21 S. Fruit Street, Suite 10
Concord, N.H. 03301-2429

TDD Access: Relay NH
1-800-735-2964

Tel. (603) 271-2431

FAX (603) 271-3878

Website:
www.puc.nh.gov

April 6, 2018

Craig Jennings
Vice President of Operations and Engineering
Liberty Utilities
15 Buttrick Road
Londonderry, NH 03053

Re: After Action Report – Winter Storm Quinn (March 7-11, 2018)

Dear Mr. Jennings:

On March 7 through 11, 2018, the impacts of Winter Storm Quinn significantly affected the Liberty Utilities electric distribution system, causing large amount of outages to the company's customers as well as similar disruption to other electricity supply providers within New Hampshire.

Puc 302.24 defines "wide-scale storms" as those affecting greater than 10% or more of a utility's customers and requiring restoration efforts lasting greater than 24 hours. Winter Storm Quinn is considered a wide-scale storm. The Commission recognizes that the March 7-11 storm was the second worst storm for Liberty Utilities in New Hampshire in terms of customer meters without power. The Commission also notes that Liberty's restoration efforts were 25% longer in duration than those of other utilities, and that the Town of Salem was the only community in New Hampshire that needed to open a shelter during the event due to the cold temperatures experienced during the extended power outage. In order to improve the Company's future restoration efforts, the Commission has determined that the completion of a self-assessment would be useful to the Commission as well as the Company. Accordingly, Liberty Utilities is directed to submit a comprehensive, written after action and self-assessment report by May 7, 2018.

At a minimum, the following information must be contained within the report:

- Number of services replaced.
- Amount of secondary wire replaced (in feet).
- Amount of primary wire (in feet, indicating size and 1ph, 2ph, 3ph, mainline).

- Number of transformers replaced.
- Number of poles replaced.
- Number of cross arms replaced.
- Number of environmental impact events.
- Restoration costs (indicate if finalized or estimated to date).
- The peak number of customer without power by date and time, including an hourly spreadsheet of the number of customers without power per town throughout the duration of the storm.
- Detailed discussion and timeline of executed restoration and how the order of restoration compares with the 2017 Liberty Utilities Emergency Response Plan restoration prioritization.
- Peak number of restoration crews (excluding damage assessors and tree crews) that were on the system at one time.
- A detailed discussion and associated timeline should be provided that describes the number of crews on the system prior to the storm, the number of crews planned for and needed for storm restoration efforts, all outgoing attempts to attain additional contractor or mutual aid crews, the number of crews offered by other contractors and utilities throughout the restoration event, and when crews were in New Hampshire and accepted by Liberty.
- Detailed discussion of storm event level planning prior to the storm with respect to line resource requirements, existing in-house line resource deficiencies, and external line contractors required.
- Date, time, and location of the first customer who lost power associated with the storm and the date, time, and location of the last customer who had power restored associated with the storm.
- A timeline of when and where the first-level damage assessment was initiated, entered into the OMS, and completed, including the quantity of resources utilized in the field, non-storm (day to day) roles of those field personnel assessing the damage, years of electric utility damage assessment experience; indicate which assessors had multiple roles within the Incident Command System.

- The process followed by damage assessors and the Damage Assessor Coordinator during the Company's phase 1 assessment and any applications or equipment that were utilized to expedite the assessment of damage through the OMS, including the use of any mobile applications or other non-paper process.

- Detailed discussion, including times and duration, regarding any problems experienced with the company's OMS system, website outage map, website crew assignment, and outage reporting including attempts to repair problems during the event.

- Details of any discussions Liberty had with Town of Salem officials, such as Emergency Directors or First Responders, regarding the provision of electric power to mitigate the need for an emergency shelter to be opened.

- Detailed discussion of Liberty's attempts to facilitate restoration with National Grid of the 23kV supply line originating at Pie Hill in Methuen and providing power to the Spicket River substation.

- The Commission's understanding is that the restoration of that substation feed would significantly restore the affected circuits out of the Spicket River substation and shorten outage durations in the North Main Street and Main Street areas accordingly.
- Discussion of restoration efforts coordinated with National Grid, including switching attempts employed by Liberty to restore power within Liberty's distribution system in lieu of National Grid's prolonged restoration efforts, with associated dates and times of each step of switching.

- Discussion should include a description of the Liberty circuits involved in potential switching, significant customers on those circuits, and the date and time when power was finally restored to the Spicket River substation.

- Include any communications with National Grid and all memoranda of understanding or efforts that have been memorialized to date regarding actions with National Grid to minimize outage durations associated with future interruptions of this line.

- List the names and roles of each employee (normal positions/titles), their roles within the Incident Command System, and the number of years of their experience within the role assigned.

- Identify those employees that hold multiple roles within the Incident Command System.

- Compare and contrast the differences in preparation that Liberty undertook for the prior Northeaster (Coastal Storm "Riley") that occurred on March 2 and 3, 2018, and Winter Storm "Quinn."

- Include weather event indices used for both storms and note any factors that should be considered when reviewing each storm.

- Please include any other metrics normally included by Liberty within its internal self-assessments.

Please file the requested report to my attention by no later than May 7, 2018.

Sincerely,

Debra A. Howland
Executive Director

Winter Storm Quinn – March 2018
After Action Report for Liberty Utilities

Prepared on: **May 7, 2018**

Prepared by: **Leo Cody**
Manager
Compliance, Quality and Emergency Management

Submitted to: **Debra A. Howland**
Executive Director
New Hampshire Public Utilities Commission

THIS PAGE INTENTIONALLY LEFT BLANK

Table of Contents

1. Purpose

2. Overview of Storm

3. After Action Review
   - 3.1 Pre-Storm Planning
     - Weather Forecasting
     - Readiness Plans and Process
     - Logistics
     - Crews
     - Support Services
   - 3.2 Communication
     - Internal
     - External
   - 3.3 Restoration Response
     - Resource Management
     - Damage Assessment and Wires Down
     - Safety

4. Summary

5. Appendices
   - *A.* Weather Sentry DTN Energy Event Index Tables
   - *B.* Liberty Utilities Daily Weather Summaries
   - *C.* Liberty Utilities Storm Planning Reports
   - *D.* NH Puce E-33 Forms
   - *E.* Storm Call Documents
   - *F.* All Events
   - *G.* Timeline of Events

6. NHPUC Information Request

Winter Storm Quinn – March 7, 2018

Winter Storm Quinn – March 7, 2018

Winter Storm Quinn – March 7, 2018

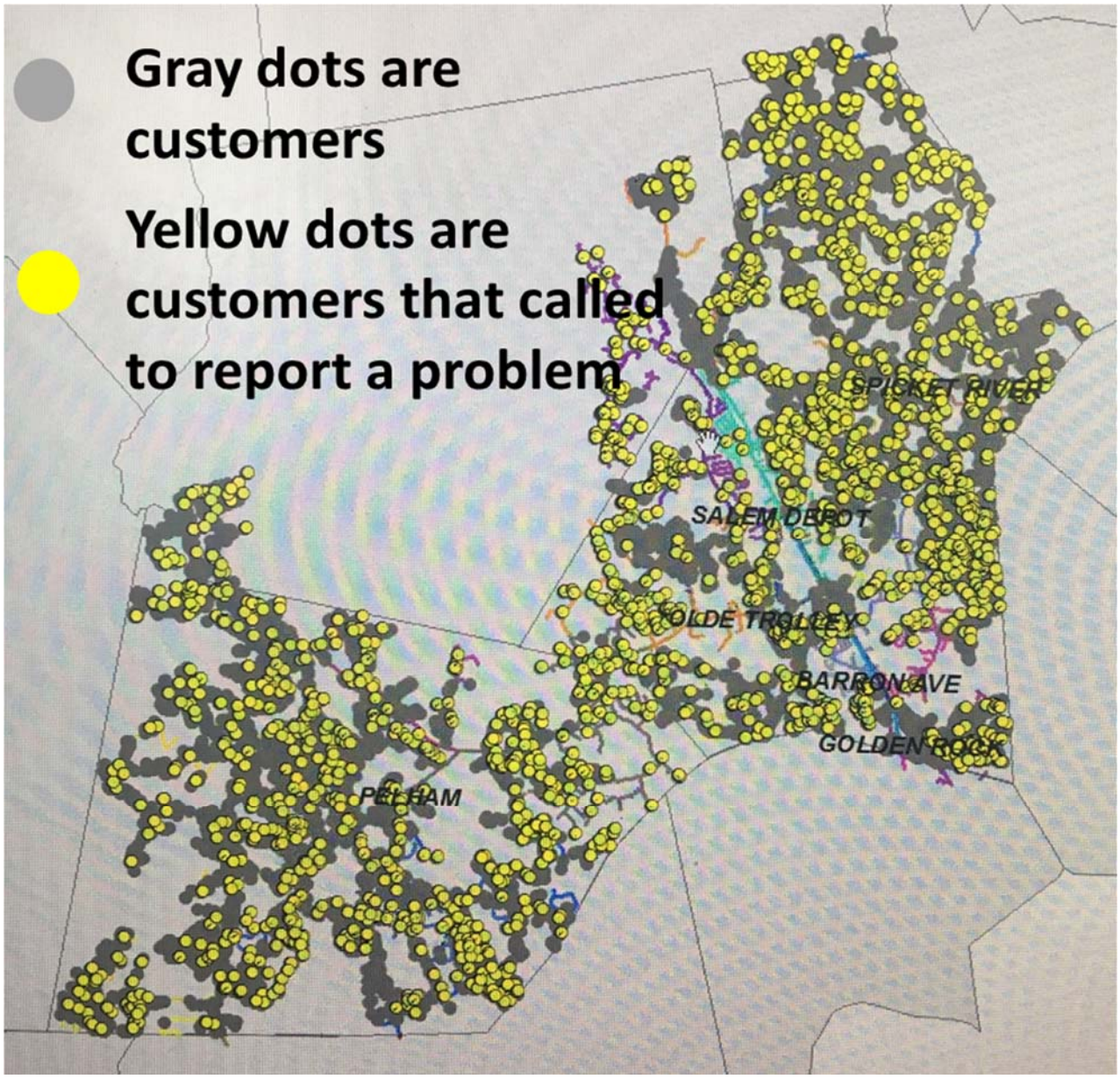

1. Purpose

In the aftermath of the December 2008 Ice Storm, the New Hampshire Public Utilities Commission ("NHPUC") undertook a review of utility emergency preparedness and response. The NHPUC issued its Final Report on December 3, 2009.

Appendix A to the Final Report, entitled "Action Items Checklist," has the following going forward requirement under Item 5, "Emergency Response Actions."

> 5.2 Each affected utility shall file self-assessments with the Commission within 60 days following any State-declared emergency event that implicates utility services. Forensic analyses of weather data should be a part of those self-assessments.

Liberty Utilities (Granite State Electric) Corp. d/b/a Liberty Utilities ("Liberty Utilities" or "the Company") prepares this report at the request of the NHPUC Safety Division. By a voice message on March 16, 2018, the NHPUC Safety Division requested that the Company file an after action report within 60 days of the completion of restorations even though there was no State-declared emergency.

Additionally, Liberty Utilities was informed by a letter dated April 6, 2018, that an After Action Report was due on May 7, 2018. The letter stated that Winter Storm Quinn was considered a wide-scale storm. The NHPUC Safety Division did not notify the Company during the event that Winter Storm Quinn was considered a wide-scale emergency and thus the reports under Puc 307.08 were not required. However, the Company forwarded those reports to the Safety Division on its own.

2. Overview of Storm

Liberty Utilities is responsible for providing uninterrupted electric service to approximately 43,000 customers in 21 cities and towns spread out over two geographic regions known as the Lebanon and Salem areas.

The two regions generally operate as independent operations areas on opposite sides of the state with no electric system interconnections between the two regions. Each region has unique weather patterns and they operate individually during most emergencies.

Over a five day period beginning in the evening of March 7, 2018, and ending in the afternoon of March 11, 2018, Liberty Utilities experienced customer outages in both regions. The first customer outages were reported at approximately 2100 hours on Wednesday, March 11. At the peak of the storm (March 8 at 0700 hours), there were approximately 17,998 customer outages (or 41% of all customers). The majority of damage was from heavy wet snow on trees and tree limbs contacting and/or bringing down poles and wires. This event interrupted service to 20,168 customers over the five day period and impacted ten towns in Liberty Utilities' service territory.

On average, any customer who experienced an outage during this event was out of service for 1,345 minutes (22 hours). Also, 99% of all customers interrupted were restored within 3 days of the beginning of the storm. Storm restoration was completed on Sunday, March 11 at approximately 1400 hours. Clean up from the storm and customer reconnections lasted several days after the conclusion of the storm.

The table below contains a summary of the interruptions by town.

Town	Customers Served	Customers Interrupted	% Interrupted
Atkinson	12	12	100%
Derry	119	119	100%
Pelham	5,673	5,564	98%
Salem	14,529	11,699	81%
Windham	1,169	1,152	99%
Acworth	204	204	100%
Alstead	1,105	927	84%
Langdon	283	74	26%
Marlow	7	7	100%
Walpole	2,102	4	0%

This event was the second worst event for Liberty Utilities since the NHPUC Safety Division began tracking such events.

Liberty Utilities Top Storm Events			
Event Name	**December 11-24, 2008 Ice Storm**	**March 7-11, 2018 Quinn**	**Oct 29 - Nov 4, 2011 Snow Storm**
# of Customers Affected	24,164	20,168	17,000
% of Customers Affected	63%	46%	41%
Duration of Restoration (hours)	168	91	108

Below is a summary of the reliability indices for this storm period.

	Events	CI	CMI	CS	SAIDI	SAIFI	CAIDI
March 7-11, 2018	153	20,168	27,132,867	44,043	616	0.46	1,345

Legend:

Event - An interruption occurring on either primary or secondary lines
CI - Customers Interrupted
CMI - Customer Minutes Interrupted
CS - Customers Served
SAIDI - System Average Interruption Duration Index
SAIFI - System Average Interruption Frequency Index
CAIDI - Customer Average Interruption Duration Index

Notes:
CMI – Customer Minutes Interrupted (Restoration time in minutes times total number of customers interrupted)
SAIDI – System Average Interruption Duration Index (Measures the total duration of an interruption for the average customer during the storm period)
SAIFI – System Average Interruption Frequency Index (The average number of times that a system customer experiences an outage during the storm period)
CAIDI – Customer Average Interruption Duration Index (Once an outage occurs the average time to restore service is found from the CAIDI)

The State of New Hampshire opened its Emergency Operating Center but did not declare an emergency event during this time period.

Under Puc 307.08 (c):

> In the event that commission staff anticipates the occurrence of a wide-scale emergency, staff shall notify the utilities and the utilities shall file crew reports prior to the onset of the wide-scale emergency. Event names shall be determined by the commission and made known to each of the utilities required to report.

The NHPUC Staff did not notify the utilities of a wide-scale emergency, no wide-scale emergency was anticipated for the two Liberty Utilities regions, and no event name was designated by the NHPUC.

3. After Action Review

3.1 Pre-Storm Planning

- **Weather Forecasting**

On Monday morning, March 5, 2018, Liberty Utilities was finishing its restoration efforts from Winter Storm Riley and immediately transitioned into storm preparation for Winter Storm Quinn.

On Monday afternoon, an internal Weather Alert was issued:
SALEM/LEBANON/CHARLESTOWN, NH: Light snow becomes possible by mid to late morning on Wednesday. The steadier snows hold off until mid to late afternoon on Wednesday with moderate to heavy snows expected by Wednesday evening and into Thursday morning before winding down the rest of Thursday across the entire region. Most of this will be normal to wet snow, all wet snow into Salem and Salem also has a chance to mix with some rain later

Wednesday and Wednesday evening which could hold down snow amounts some. Currently thinking a widespread 6-12 inches is expected across most of New Hampshire with isolated higher amounts, but likely reserved for higher elevations and interior areas away from the coast/river valleys. Wind gusts of 25-35 mph will also be possible Wednesday night and into Thursday.

On Tuesday morning, March 6, 2018, a Winter Storm Warning was issued:
*The National Weather Service has issued a Hazardous **Weather Outlook** and a **Winter Storm Warning** until 13:00 on Thursday 3/8/18. Telvent is predicting a **Level 4 Snow** event in Salem and Manchester and a **Level 3 Snow** event in Lebanon and Charlestown. Periods of light snow will develop between 7-10 am Wednesday. Periods of moderate/heavy snow are expected between 6 pm Wednesday until 10 am Thursday. Accumulations will range between 12-18" in Salem and Manchester and 8-14" in Lebanon and Charlestown. Snow consistency is expected to start out normal then quickly change to wet. Winds could peak around 25-35 mph Wednesday evening into Thursday morning. No ice accretion is being predicted for this storm.*

Appendix A contains the Weather Sentry DTN Energy Event Index Tables for the period March 5–March 11, 2018.

Appendix B contains the Liberty Utilities Daily Weather Summaries for the period March 5–March 11, 2018.

- **Readiness Plans and Process**

Liberty Utilities followed its Electric Emergency Management Plan dated June 1, 2017. In 2016, this Plan was revised and updated to incorporate the NHPUC's Thanksgiving Storm 2014 After Action Report Requirements.

Prior to the storm, a Type 2 Event (as defined in the Emergency Management Plan) was forecasted to commence on Tuesday, March 6, 2018. Type 2 is considered a Major Impact Event with Comprehensive Support. This event is typically characterized as having up to 200 Locations of Trouble and up to 8,400 customer outages.

The Company notified internal personnel and implemented internal storm assignments that were appropriate for a Type 2 Event.

Under Puc 306.09, Company Emergency Response Plans shall incorporate projected Event levels consistent with Table 306-1.

Table 306-1			
Utility	**ERP Event Level**	**% Customers Out**	**Outage Duration (Hrs.)**
	5	≤2	<12
	4	>2≤5	0-24
	3	>5 ≤10	24-48
	2	>10≤20	48-144
	1	>20	48-240

The Liberty Utilities Electric Emergency Management Plan is consistent with the Puc Rules for Electric Service.

Note that the Company Event Levels and the NHPUC Event Levels differ from the Weather Sentry Levels (shown below).

Energy Event Index Definition

No Leaves (Nov 1 - Mar 31)

EEI	Wind Speed	Wind/Gust	Snow	Ice
1	< 40 mph	< 45 mph	< 6 in.	< 1/10 in.
2	>= 40 mph	>= 45 mph	>= 6 in.	>= 1/10 in.
3	>= 50 mph	>= 55 mph	>= 8 in.	>= 3/8 in.
4	>= 60 mph	>= 70 mph	>= 12 in.	>= 1/2 in.
5	>= 70 mph	>= 85 mph	>= 24 in.	>= 1 in.

Confidence Level	
Low	<30% chance the most likely index level remains at that level through the event
Medium	30-60% chance the most likely index level remains at that level through the event
High	>=60% chance the most likely index level remains at that level through the event

*Note: Confidence is NOT a measure of probability of an event occurring; if you have an accompanying forecast discussion that information can be found there. Confidence is a measure of how likely the forecasted index level will stay at that level from now through the event, or a way to measure the potential for variability in the forecast. So for example, if it is Monday and there are level 2 gusts forecasted on Wednesday with high confidence, and if your customizable threshold for high confidence is set at 60%, it means the following: There is a >=60% chance the most likely forecasted gusts will remain at level 2 with all updates from now through Wednesday.

On Tuesday afternoon, the Company participated in NAMAG (North Atlantic Mutual Assistance Group) Call #9 for Winter Storm Riley and held its own internal Call #1 for Winter Storm Quinn. Over the next five days, the Company would participate in seven additional NAMAG calls and hold eight additional internal calls. On the sixth day, the Company began preparations for Winter Storm Skylar.

On Tuesday afternoon, March 6, 2018, the Company conducted its first internal storm call. Typically, approximately 50 – 60 employees with storm assignments are invited to participate in such calls. Attached to the meeting invitation are the following documents:

1. Meeting Agenda – Prior to Event dated March 5, 2018
2. Electric Event Organization dated March 5, 2018
3. Electric Operations Emergency Response Assignments dated March 5, 2018

These three documents are included in *Appendix E*. The Manager of Emergency Management walked through the meeting agenda.

On the initial call, the Company discussed:

- **Logistics**

Electric Operations evaluated the material levels needed for a Type 2 Event and ensured that storm kits and vehicles included the necessary items.

The hotels and pre-staging locations were identified and secured. Rental vehicles were acquired for damage assessment.

- **Crews**

Electric Operations determined the number of internal company and on-property contractor line and tree crews that were available for Liberty Utilities in each of the regions. The Company determined that it would request additional NAMAG crews. However, the Company knew that none were available at that time as a result of its participation in NAMAG calls.

- **Support Services**

The Company determined that, as a Type 2 Event, the municipal rooms, storm rooms, wires down rooms, and damage assessment rooms would open.

Also, Emergency Dispatch, Electric Control, and the Call Center brought in additional personnel to handle the anticipated additional work load.

3.2 Communication

- **Internal**

During blue sky days, as part of its daily activity, every 4 hours, Dispatch and Control sends out weather forecasts to appropriate internal personnel in New Hampshire.

During anticipated storm events, Dispatch and Control also sends out storm planning reports. Additionally, Emergency Management conducts storm planning conference calls that follow a Meeting Agenda - During Event (see *Appendix E*). There are other smaller group meetings and calls within Electric Operations and those with Storm Assignments to Electric Operations as needed.

These practices were followed starting on Tuesday, March 6 through Sunday, March 11.

Appendix C contains the Storm Planning Reports issued by Dispatch and Control. Copies were voluntarily forwarded to the NHPUC Safety Division and to nheoc@dos.nh.gov.

- **External**

While under no requirement to do so, the Company forwarded by email copies of Puc Form E-33 Distribution Crew Report to the NHPUC Safety Division. Likewise, the Company and the NHPUC Safety Division engaged in several email exchanges and phone calls during this time period.

Appendix D contains corrected copies of the Puc E-33 Forms.

The Company is not aware of any scheduled calls initiated by state government during the restoration period.

The New Hampshire Department of Safety did not issue a Declaration of Emergency. However, two press releases were issued and the NH Emergency Operations Center was opened. Also, the New Hampshire Cybersecurity Functional Exercise scheduled for March 8, 2018, was postponed.

The Company opened its Municipal Contact Center on Wednesday, March 7, at 1200 hours. The Center remained opened until Sunday, March 11 at 1900 hours. The Company communicated directly with municipal officials and first responders during this time period. Their concerns, in addition to customer outages, were the blocked roads due to tree damage and wires down.

Liberty Utilities significantly ramped up communications with customers using its social media pages (Facebook and Twitter). The Company pushed out regular general updates to all followers every 2-3 hours and attempted to respond to all customer inquiries during normal business hours. After hours, the Company reduced the individual customer responses to just emergency situations. The Company posted photos of damage so customers could see the magnitude of the damage. Liberty Utilities also utilized its website and provided updates every 3-4 hours. Customer Outage Maps were available to the public throughout the storm via the Company web-site. This was not the first time that the Company made such extensive use of social media to communicate with the public. The response by customers was positive. Customers were made aware of the Company's restoration efforts and knew that their particular situation was not being ignored.

3.3 Restoration Process

- **Resource Management**

On Monday morning, March 5, the Incident Commander began securing Company and on-property line and tree crews. Liberty Utilities had released contractor crews to work out of state to assist another utility during Winter Storm Riley. The Company requested that they return to New Hampshire by Wednesday morning ready to work.

On Tuesday morning, March 6, the Company requested ten distribution line crews and ten tree crews from the NAMAG. At that time, there were outstanding requests for approximately 1,210 distribution line crews and 22 tree crews by other NAMAG members. These outstanding requests were the result of back to back to back storms impacting the same operators in a short time period. The Company knew on Tuesday that we would not be able to pre-stage NAMAG crews.

By Wednesday evening, March 7, the Company was beginning to experience a Type 2 Event – Major Impact Event (Comprehensive Support). Such events are characterized as having up to 200 Locations of Trouble and up to 8,400 customer outages. As the Company received more information that evening, it monitored restoration efforts and dispatched the line and tree crews when and where it was safe to do so.

How and when Liberty Utilities utilized its crews is reflected in the Puc Form E-33 reports. As previously stated, these were voluntarily provided to the NHPUC Safety Division throughout the storm. An error was discovered in some reports and corrected ones are in *Appendix D.* The reports include the NAMAG crews secured on Friday, March 9.

- **Damage Assessment and Wires Down**

Electric Operations, with assistance from Gas Operations and Engineering personnel, performed all damage assessment and wires down requests. This effort began as soon as the first no power calls came in on Wednesday evening.

Additionally, the Company introduced the iRestore First Responder Smartphone App to the local fire and police departments in its electric service territories during the month of February 2018. The App enables first responders to easily send geo-tagged photos of damaged equipment directly to the Liberty Utilities. The first successful use of the App occurred during Storm Quinn. Police and Fire Dispatch Centers are still required to call Liberty Utilities Dispatch Center to report damaged equipment or emergencies. The use of the App is not limited to storms.

- **Safety**

Liberty Utilities did not experience any safety related incidents during the storm. Each morning, a written storm safety briefing was issued to all Liberty Utilities personnel with a storm assignment and to the mutual aid contractors working in the service territory.

During the five day event, there were:

- 150 employees working,
- 100 contractors working,
- 11,000 hours worked, and
- 0 safety incidents

concerning employees, contractors, customers, first responders, or the public.

4. Summary

The Settlement Agreement in Docket No. DG 06-107, approved by Order No. 24,777, requires Granite State to establish a storm reserve fund. The fund is used to pay for all of the operations and maintenance costs incurred by Granite State as the result of major storms. A major storm is defined as a severe weather event or events causing 30 concurrent troubles (i.e., interruption events occurring on either primary or secondary lines) and 15 percent of customers interrupted or 45 concurrent troubles.

The Settlement Agreement in Docket No. DE 13-063, approved by Order No. 25,738, allows Liberty Utilities to charge costs to the storm reserve if the weather forecast shows an EII Level of 3 or greater with a high probability of occurrence. The costs include pre-staging of crews, standby arrangements with external contractors, incremental compensation of employees, and other costs that may be incurred to prepare for a qualifying major storm.

There were 153 interruption events during the 91-hour period impacting 20,168 customers (or 46%). Therefore, the storm met the criteria for a major storm designation, and the costs are being charged to the storm reserve fund.

The Company has created a Storm Timeline of Events for the storm, which is contained in *Appendix G.*

Appendix *F* contains a listing of all of the customer interruptions or Events.

5. Appendices

A. Weather Sentry DTN Energy Event Index Tables
B. Liberty Utilities Daily Weather Summaries
C. Liberty Utilities Storm Planning Reports
D. NH Puc E-33 Forms
E. Storm Call Documents
F. All Events
G. Storm Timeline of Events

THIS PAGE INTENTIONALLY LEFT BLANK

Appendix *A*

Weather Sentry DTN Energy Event Index Tables

Energy Event Index for ALGONQUIN POWER

Valid Time: March 5, 2018 8:00 AM EST

Parameter	Region	Day 1	Day 2	Day 3	Day 4	Day 5	Day 6	Day 7	Day 8	Day 9	Day 10
Wind Speed	Montauk NY	1	1	1	1	1	1	1	1	1	1
	Northern Lebanon Hanover NH	1	1	1	1	1	1	1	1	1	1
	Northwest Monroe Bath NH	1	1	1	1	1	1	1	1	1	1
	Southern Salem Derry NH	1	1	1	1	1	1	1	1	1	1
	Western Alstead Charlestown NH	1	1	1	1	1	1	1	1	1	1
Wind/Gust	Montauk NY	1	1	1	1	1	1	1	1	1	1
	Northern Lebanon Hanover NH	1	1	1	1	1	1	1	1	1	1
	Northwest Monroe Bath NH	1		1	1	1	1	1	1	1	1
	Southern Salem Derry NH	1	1	1	1	1	1	1	1	1	1
	Western Alstead Charlestown NH	1	1	1	1	1	1	1	1	1	1
Snow	Montauk NY	1	1	1	1	1	1	1	1	1	1
	Northern Lebanon Hanover NH	1	1	3	3	1	1	1	1	1	1
	Northwest Monroe Bath NH	1	1	3	3	1	1	1	1	1	1
	Southern Salem Derry NH	1	1	3	3	1	1	1	1	1	1
	Western Alstead Charlestown NH	1	1	3	3	1	1	1	1	1	1
Ice	Montauk NY	1	1	1	1	1	1	1	1	1	1
	Northern Lebanon Hanover NH	1	1	1	1	1	1	1	1	1	1
	Northwest Monroe Bath NH	1	1	1	1	1	1	1	1	1	1
	Southern Salem Derry NH	1	1	1	1	1	1	1	1	1	1
	Western Alstead Charlestown NH	1	1	1	1	1	1	1	1	1	1
Confidence Level	Montauk NY	High	High	Medium	Medium	High	High	High	High	High	High
	Northern Lebanon Hanover NH	High	High	Medium	Medium	High	High	High	High	High	High
	Northwest Monroe Bath NH	High	High	Medium	Medium	High	High	High	High	High	High
	Southern Salem Derry NH	High	High	Medium	Medium	High	High	High	High	High	High
	Western Alstead Charlestown NH	High	High	Medium	Medium	High	High	High	High	High	High

Energy Event Index for ALGONQUIN POWER

Valid Time: March 5, 2018 4:00 PM EST

Parameter	Region	Day 1	Day 2	Day 3	Day 4	Day 5	Day 6	Day 7	Day 8	Day 9	Day 10
Wind Speed	Montauk NY	1	1	1	1	1	1	1	1	1	1
	Northern Lebanon Hanover NH	1	1	1	1	1	1	1	1	1	1
	Northwest Monroe Bath NH	1	1	1	1	1	1	1	1	1	1
	Southern Salem Derry NH	1	1	1	1	1	1	1	1	1	1
	Western Alstead Charlestown NH	1	1	1	1	1	1	1	1	1	1
Wind/Gust	Montauk NY	1	1	1	1	1	1	1	1	1	1
	Northern Lebanon Hanover NH	1	1	1	1	1	1	1	1	1	1
	Northwest Monroe Bath NH	1	1	1	1	1	1	1	1	1	1
	Southern Salem Derry NH	1	1	1	1	1	1	1	1	1	1
	Western Alstead Charlestown NH	1	1	1	1	1	1	1	1	1	1
Snow	Montauk NY	1	1	1	1	1	1	1	1	1	1
	Northern Lebanon Hanover NH	1	1	3	3	1	1	1	1	1	1
	Northwest Monroe Bath NH	1	1	3	3	1	1	1	1	1	1
	Southern Salem Derry NH	1	1	3	3	1	1	1	1	1	1
	Western Alstead Charlestown NH	1	1	3	3	1	1	1	1	1	1
Ice	Montauk NY	1	1	1	1	1	1	1	1	1	1
	Northern Lebanon Hanover NH	1	1	1	1	1	1	1	1	1	1
	Northwest Monroe Bath NH	1	1	1	1	1	1	1	1	1	1
	Southern Salem Derry NH	1	1	1	1	1	1	1	1	1	1
	Western Alstead Charlestown NH	1	1	1	1	1	1	1	1	1	1
Confidence Level	Montauk NY	High	High	Medium	Medium	High	High	High	High	High	High
	Northern Lebanon Hanover NH	High	High	Medium	Medium	High	High	High	High	High	High
	Northwest Monroe Bath NH	High	High	Medium	Medium	High	High	High	High	High	High
	Southern Salem Derry NH	High	High	Medium	Medium	High	High	High	High	High	High
	Western Alstead Charlestown NH	High	High	Medium	Medium	High	High	High	High	High	High

Energy Event Index for ALGONQUIN POWER

Valid Time: March 6, 2018 8:00 AM EST

Parameter	Region	Day 1	Day 2	Day 3	Day 4	Day 5	Day 6	Day 7	Day 8	Day 9	Day 10
Wind Speed	Montauk NY	1	1	1	1	1	1	1	1	1	1
	Northern Lebanon Hanover NH	1	1	1	1	1	1	1	1	1	1
	Northwest Monroe Bath NH	1	1	1	1	1	1	1	1	1	1
	Southern Salem Derry NH	1	1	1	1	1	1	1	1	1	1
	Western Alstead Charlestown NH	1	1	1	1	1	1	1	1	1	1
Wind/Gust	Montauk NY	1	1	1	1	1	1	1	1	1	1
	Northern Lebanon Hanover NH	1	1	1	1	1	1	1	1	1	1
	Northwest Monroe Bath NH	1	1	1	1	1	1	1	1	1	1
	Southern Salem Derry NH	1	1	1	1	1	1	1	1	1	1
	Western Alstead Charlestown NH	1	1	1	1	1	1	1	1	1	1
Snow	Montauk NY	1	1	1	1	1	1	1	1	1	1
	Northern Lebanon Hanover NH	1	3	3	1	1	1	1	1	1	1
	Northwest Monroe Bath NH	1	3	3	1	1	1	1	1	1	1
	Southern Salem Derry NH	1	4	4	1	1	1	1	1	1	1
	Western Alstead Charlestown NH	1	3	3	1	1	1	1	1	1	1
Ice	Montauk NY	1	1	1	1	1	1	1	1	1	1
	Northern Lebanon Hanover NH	1	1	1	1	1	1	1	1	1	1
	Northwest Monroe Bath NH	1	1	1	1	1	1	1	1	1	1
	Southern Salem Derry NH	1	1	1	1	1	1	1	1	1	1
	Western Alstead Charlestown NH	1	1	1	1	1	1	1	1	1	1
Confidence Level	Montauk NY	High	High	High	High	High	High	High	High	High	High
	Northern Lebanon Hanover NH	High	High	High	High	High	High	High	High	High	High
	Northwest Monroe Bath NH	High	High	High	High	High	High	High	High	High	High
	Southern Salem Derry NH	High	High	High	High	High	High	High	High	High	High
	Western Alstead Charlestown NH	High	High	High	High	High	High	High	High	High	High

Energy Event Index for ALGONQUIN POWER

Valid Time: March 6, 2018 3:00 PM EST

Parameter	Region	Day 1	Day 2	Day 3	Day 4	Day 5	Day 6	Day 7	Day 8	Day 9	Day 10
Wind Speed	Montauk NY	1	1	1	1	1	1	1	1	1	1
	Northern Lebanon Hanover NH	1	1	1	1	1	1	1	1	1	1
	Northwest Monroe Bath NH	1	1	1	1	1	1	1	1	1	1
	Southern Salem Derry NH	1	1	1	1	1	1	1	1	1	1
	Western Alstead Charlestown NH	1	1	1	1	1	1	1	1	1	1
Wind/Gust	Montauk NY	1	1	1	1	1	1	1	1	1	1
	Northern Lebanon Hanover NH	1	1	1	1	1	1	1	1	1	1
	Northwest Monroe Bath NH	1	1	1	1	1	1	1	1	1	1
	Southern Salem Derry NH	1	1	1	1	1	1	1	1	1	1
	Western Alstead Charlestown NH	1	1	1	1	1	1	1	1	1	1
Snow	Montauk NY	1	1	1	1	1	1	1	1	1	1
	Northern Lebanon Hanover NH	1	3	3	1	1	1	1	1	1	1
	Northwest Monroe Bath NH	1	3	3	1	1	1	1	1	1	1
	Southern Salem Derry NH	1	4	4	1	1	1	1	1	1	1
	Western Alstead Charlestown NH	1	3	3	1	1	1	1	1	1	1
Ice	Montauk NY	1	1	1	1	1	1	1	1	1	1
	Northern Lebanon Hanover NH	1	1	1	1	1	1	1	1	1	1
	Northwest Monroe Bath NH	1	1	1	1	1	1	1	1	1	1
	Southern Salem Derry NH	1	1	1	1	1	1	1	1	1	1
	Western Alstead Charlestown NH	1	1	1	1	1	1	1	1	1	1
Confidence Level	Montauk NY	High	High	High	High	High	High	High	High	High	High
	Northern Lebanon Hanover NH	High	High	High	High	High	High	High	High	High	High
	Northwest Monroe Bath NH	High	High	High	High	High	High	High	High	High	High
	Southern Salem Derry NH	High	High	High	High	High	High	High	High	High	High
	Western Alstead Charlestown NH	High	High	High	High	High	High	High	High	High	High

Energy Event Index for ALGONQUIN POWER

Valid Time: March 7, 2018 8:00 AM EST

Parameter	Region	Day 1	Day 2	Day 3	Day 4	Day 5	Day 6	Day 7	Day 8	Day 9	Day 10
Wind Speed	Montauk NY	1	1	1	1	1	1	1	1	1	1
	Northern Lebanon Hanover NH	1	1	1	1	1	1	1	1	1	1
	Northwest Monroe Bath NH	1	1	1	1	1	1	1	1	1	1
	Southern Salem Derry NH	1	1	1	1	1	1	1	1	1	1
	Western Alstead Charlestown NH	1	1	1	1	1	1	1	1	1	1
Wind/Gust	Montauk NY	1	1	1	1	1	1	1	1	1	1
	Northern Lebanon Hanover NH	1	1	1	1	1	1	1	1	1	1
	Northwest Monroe Bath NH	1	1	1	1	1	1	1	1	1	1
	Southern Salem Derry NH	1	1	1	1	1	1	1	1	1	1
	Western Alstead Charlestown NH	1	1	1	1	1	1	1	1	1	1
Snow	Montauk NY	1	1	1	1	1	1	1	1	1	1
	Northern Lebanon Hanover NH	3	3	1	1	1	1	1	1	1	1
	Northwest Monroe Bath NH	3	3	1	1	1	1	1	1	1	1
	Southern Salem Derry NH	4	4	1	1	1	1	1	1	1	1
	Western Alstead Charlestown NH	3	3	1	1	1	1	1	1	1	1
Ice	Montauk NY	1	1	1	1	1	1	1	1	1	1
	Northern Lebanon Hanover NH	1	1	1	1	1	1	1	1	1	1
	Northwest Monroe Bath NH	1	1	1	1	1	1	1	1	1	1
	Southern Salem Derry NH	1	1	1	1	1	1	1	1	1	1
	Western Alstead Charlestown NH	1	1	1	1	1	1	1	1	1	1
Confidence Level	Montauk NY	High	High	High	High	High	High	High	High	High	High
	Northern Lebanon Hanover NH	High	High	High	High	High	High	High	High	High	High
	Northwest Monroe Bath NH	High	High	High	High	High	High	High	High	High	High
	Southern Salem Derry NH	High	High	High	High	High	High	High	High	High	High
	Western Alstead Charlestown NH	High	High	High	High	High	High	High	High	High	High

Energy Event Index for ALGONQUIN POWER

Valid Time: March 7, 2018 4:00 PM EST

Parameter	Region	Day 1	Day 2	Day 3	Day 4	Day 5	Day 6	Day 7	Day 8	Day 9	Day 10
Wind Speed	Montauk NY	1	1	1	1	1	1	1	1	1	1
	Northern Lebanon Hanover NH	1	1	1	1	1	1	1	1	1	1
	Northwest Monroe Bath NH	1	1	1	1	1	1	1	1	1	1
	Southern Salem Derry NH	1	1	1	1	1	1	1	1	1	1
	Western Alstead Charlestown NH	1	1	1	1	1	1	1	1	1	1
Wind/Gust	Montauk NY	1	1	1	1	1	1	1	1	1	1
	Northern Lebanon Hanover NH	1	1	1	1	1	1	1	1	1	1
	Northwest Monroe Bath NH	1	1	1	1	1	1	1	1	1	1
	Southern Salem Derry NH	1	1	1	1	1	1	1	1	1	1
	Western Alstead Charlestown NH	1	1	1	1	1	1	1	1	1	1
Snow	Montauk NY	1	1	1	1	1	1	1	1	1	1
	Northern Lebanon Hanover NH	3	3	1	1	1	1	1	1	1	1
	Northwest Monroe Bath NH	3	3	1	1	1	1	1	1	1	1
	Southern Salem Derry NH	3	3	1	1	1	1	1	1	1	1
	Western Alstead Charlestown NH	4	4	1	1	1	1	1	1	1	1
Ice	Montauk NY	1	1	1	1	1	1	1	1	1	1
	Northern Lebanon Hanover NH	1	1	1	1	1	1	1	1	1	1
	Northwest Monroe Bath NH	1	1	1	1	1	1	1	1	1	1
	Southern Salem Derry NH	1	1	1	1	1	1	1	1	1	1
	Western Alstead Charlestown NH	1	1	1	1	1	1	1	1	1	1
Confidence Level	Montauk NY	High	High	High	High	High	High	High	High	High	High
	Northern Lebanon Hanover NH	High	High	High	High	High	High	High	High	High	High
	Northwest Monroe Bath NH	High	High	High	High	High	High	High	High	High	High
	Southern Salem Derry NH	High	High	High	High	High	High	High	High	High	High
	Western Alstead Charlestown NH	High	High	High	High	High	High	High	High	High	High

Energy Event Index for ALGONQUIN POWER

Valid Time: March 8, 2018 8:00 AM EST

Parameter	Region	Day 1	Day 2	Day 3	Day 4	Day 5	Day 6	Day 7	Day 8	Day 9	Day 10
Wind Speed	Montauk NY	1	1	1	1	1	1	1	1	1	1
	Northern Lebanon Hanover NH	1	1	1	1	1	1	1	1	1	1
	Northwest Monroe Bath NH	1	1	1	1	1	1	1	1	1	1
	Southern Salem Derry NH	1	1	1	1	1	1	1	1	1	1
	Western Alstead Charlestown NH	1	1	1	1	1	1	1	1	1	1
Wind/Gust	Montauk NY	1	1	1	1	1	1	1	1	1	1
	Northern Lebanon Hanover NH	1	1	1	1	1	1	1	1	1	1
	Northwest Monroe Bath NH	1	1	1	1	1	1	1	1	1	1
	Southern Salem Derry NH	1	1	1	1	1	1	1	1	1	1
	Western Alstead Charlestown NH	1	1	1	1	1	1	1	1	1	1
Snow	Montauk NY	1	1	1	1	1	1	1	1	1	1
	Northern Lebanon Hanover NH	3	1	1	1	1	1	1	1	1	1
	Northwest Monroe Bath NH	3	1	1	1	1	1	1	1	1	1
	Southern Salem Derry NH	3	1	1	1	1	1	1	1	1	1
	Western Alstead Charlestown NH	4	1	1	1	1	1	1	1	1	1
Ice	Montauk NY	1	1	1	1	1	1	1	1	1	1
	Northern Lebanon Hanover NH	1	1	1	1	1	1	1	1	1	1
	Northwest Monroe Bath NH	1	1	1	1	1	1	1	1	1	1
	Southern Salem Derry NH	1	1	1	1	1	1	1	1	1	1
	Western Alstead Charlestown NH	1	1	1	1	1	1	1	1	1	1
Confidence Level	Montauk NY	High	High	High	High	High	High	High	High	High	High
	Northern Lebanon Hanover NH	High	High	High	High	High	High	High	High	High	High
	Northwest Monroe Bath NH	High	High	High	High	High	High	High	High	High	High
	Southern Salem Derry NH	High	High	High	High	High	High	High	High	High	High
	Western Alstead Charlestown NH	High	High	High	High	High	High	High	High	High	High

Energy Event Index for ALGONQUIN POWER

Valid Time: March 8, 2018 4:00 PM EST

Parameter	Region	Day 1	Day 2	Day 3	Day 4	Day 5	Day 6	Day 7	Day 8	Day 9	Day 10
Wind Speed	Montauk NY	1	1	1	1	1	1	1	1	1	1
	Northern Lebanon Hanover NH	1	1	1	1	1	1	1	1	1	1
	Northwest Monroe Bath NH	1	1	1	1	1	1	1	1	1	1
	Southern Salem Derry NH	1	1	1	1	1	1	1	1	1	1
	Western Alstead Charlestown NH	1	1	1	1	1	1	1	1	1	1
Wind/Gust	Montauk NY	1	1	1	1	1	1	1	1	1	1
	Northern Lebanon Hanover NH	1	1	1	1	1	1	1	1	1	1
	Northwest Monroe Bath NH	1	1	1	1	1	1	1	1	1	1
	Southern Salem Derry NH	1	1	1	1	1	1	1	1	1	1
	Western Alstead Charlestown NH	1	1	1	1	1	1	1	1	1	1
Snow	Montauk NY	1	1	1	1	1	1	1	1	1	1
	Northern Lebanon Hanover NH	3	1	1	1	1	1	1	1	1	1
	Northwest Monroe Bath NH	3	1	1	1	1	1	1	1	1	1
	Southern Salem Derry NH	3	1	1	1	1	1	1	1	1	1
	Western Alstead Charlestown NH	4	1	1	1	1	1	1	1	1	1
Ice	Montauk NY	1	1	1	1	1	1	1	1	1	1
	Northern Lebanon Hanover NH	1	1	1	1	1	1	1	1	1	1
	Northwest Monroe Bath NH	1	1	1	1	1	1	1	1	1	1
	Southern Salem Derry NH	1	1	1	1	1	1	1	1	1	1
	Western Alstead Charlestown NH	1	1	1	1	1	1	1	1	1	1
Confidence Level	Montauk NY	High	High	High	High	Medium	High	High	High	High	High
	Northern Lebanon Hanover NH	High	High	High	High	Medium	High	High	High	High	High
	Northwest Monroe Bath NH	High	High	High	High	Medium	High	High	High	High	High
	Southern Salem Derry NH	High	High	High	High	Medium	High	High	High	High	High
	Western Alstead Charlestown NH	High	High	High	High	Medium	High	High	High	High	High

Energy Event Index for ALGONQUIN POWER

Valid Time: March 9, 2018 8:00 AM EST

Parameter	Region	Day 1	Day 2	Day 3	Day 4	Day 5	Day 6	Day 7	Day 8	Day 9	Day 10
Wind Speed	Montauk NY	1	1	1	1	1	1	1	1	1	1
	Northern Lebanon Hanover NH	1	1	1	1	1	1	1	1	1	1
	Northwest Monroe Bath NH	1	1	1	1	1	1	1	1	1	1
	Southern Salem Derry NH	1	1	1	1	1	1	1	1	1	1
	Western Alstead Charlestown NH	1	1	1	1	1	1	1	1	1	1
Wind/Gust	Montauk NY	1	1	1	1	1	1	1	1	1	1
	Northern Lebanon Hanover NH	1	1	1	1	1	1	1	1	1	1
	Northwest Monroe Bath NH	1	1	1	1	1	1	1	1	1	1
	Southern Salem Derry NH	1	1	1	1	1	1	1	1	1	1
	Western Alstead Charlestown NH	1	1	1	1	1	1	1	1	1	1
Snow	Montauk NY	1	1	1	1	1	1	1	1	1	1
	Northern Lebanon Hanover NH	1	1	1	1	1	1	1	1	1	1
	Northwest Monroe Bath NH	1	1	1	1	1	1	1	1	1	1
	Southern Salem Derry NH	1	1	1	1	1	1	1	1	1	1
	Western Alstead Charlestown NH	1	1	1	1	1	1	1	1	1	1
Ice	Montauk NY	1	1	1	1	1	1	1	1	1	1
	Northern Lebanon Hanover NH	1	1	1	1	1	1	1	1	1	1
	Northwest Monroe Bath NH	1	1	1	1	1	1	1	1	1	1
	Southern Salem Derry NH	1	1	1	1	1	1	1	1	1	1
	Western Alstead Charlestown NH	1	1	1	1	1	1	1	1	1	1
Confidence Level	Montauk NY	High	High	High	Medium	High	High	High	High	High	High
	Northern Lebanon Hanover NH	High	High	High	Medium	High	High	High	High	High	High
	Northwest Monroe Bath NH	High	High	High	Medium	High	High	High	High	High	High
	Southern Salem Derry NH	High	High	High	Medium	High	High	High	High	High	High
	Western Alstead Charlestown NH	High	High	High	Medium	High	High	High	High	High	High

Energy Event Index for ALGONQUIN POWER

Valid Time: March 9, 2018 4:00 PM EST

Parameter	Region	Day 1	Day 2	Day 3	Day 4	Day 5	Day 6	Day 7	Day 8	Day 9	Day 10
Wind Speed	Montauk NY	1	1	1	1	1	1	1	1	1	1
	Northern Lebanon Hanover NH	1	1	1	1	1	1	1	1	1	1
	Northwest Monroe Bath NH	1	1	1	1	1	1	1	1	1	1
	Southern Salem Derry NH	1	1	1	1	1	1	1	1	1	1
	Western Alstead Charlestown NH	1	1	1	1	1	1	1	1	1	1
Wind/Gust	Montauk NY	1	1	1	1	1	1	1	1	1	1
	Northern Lebanon Hanover NH	1	1	1	1	1	1	1	1	1	1
	Northwest Monroe Bath NH	1	1	1	1	1	1	1	1	1	1
	Southern Salem Derry NH	1	1	1	1	1	1	1	1	1	1
	Western Alstead Charlestown NH	1	1	1	1	1	1	1	1	1	1
Snow	Montauk NY	1	1	1	1	1	1	1	1	1	1
	Northern Lebanon Hanover NH	1	1	1	1	1	1	1	1	1	1
	Northwest Monroe Bath NH	1	1	1	1	1	1	1	1	1	1
	Southern Salem Derry NH	1	1	1	1	1	1	1	1	1	1
	Western Alstead Charlestown NH	1	1	1	1	1	1	1	1	1	1
Ice	Montauk NY	1	1	1	1	1	1	1	1	1	1
	Northern Lebanon Hanover NH	1	1	1	1	1	1	1	1	1	1
	Northwest Monroe Bath NH	1	1	1	1	1	1	1	1	1	1
	Southern Salem Derry NH	1	1	1	1	1	1	1	1	1	1
	Western Alstead Charlestown NH	1	1	1	1	1	1	1	1	1	1
Confidence Level	Montauk NY	High	High	High	Medium	High	High	High	High	High	High
	Northern Lebanon Hanover NH	High	High	High	Medium	High	High	High	High	High	High
	Northwest Monroe Bath NH	High	High	High	Medium	High	High	High	High	High	High
	Southern Salem Derry NH	High	High	High	Medium	High	High	High	High	High	High
	Western Alstead Charlestown NH	High	High	High	Medium	High	High	High	High	High	High

Energy Event Index for ALGONQUIN POWER

Valid Time: March 10, 2018 8:00 AM EST

Parameter	Region	Day 1	Day 2	Day 3	Day 4	Day 5	Day 6	Day 7	Day 8	Day 9	Day 10
Wind Speed	Montauk NY	1	1	1	1	1	1	1	1	1	1
	Northern Lebanon Hanover NH	1	1	1	1	1	1	1	1	1	1
	Northwest Monroe Bath NH	1	1	1	1	1	1	1	1	1	1
	Southern Salem Derry NH	1	1	1	1	1	1	1	1	1	1
	Western Alstead Charlestown NH	1	1	1	1	1	1	1	1	1	1
Wind/Gust	Montauk NY	1	1	1	1	1	1	1	1	1	1
	Northern Lebanon Hanover NH	1	1	1	1	1	1	1	1	1	1
	Northwest Monroe Bath NH	1	1	1	1	1	1	1	1	1	1
	Southern Salem Derry NH	1	1	1	1	1	1	1	1	1	1
	Western Alstead Charlestown NH	1	1	1	1	1	1	1	1	1	1
Snow	Montauk NY	1	1	1	1	1	1	1	1	1	1
	Northern Lebanon Hanover NH	1	1	1	1	1	1	1	1	1	1
	Northwest Monroe Bath NH	1	1	1	1	1	1	1	1	1	1
	Southern Salem Derry NH	1	1	1	1	1	1	1	1	1	1
	Western Alstead Charlestown NH	1	1	1	1	1	1	1	1	1	1
Ice	Montauk NY	1	1	1	1	1	1	1	1	1	1
	Northern Lebanon Hanover NH	1	1	1	1	1	1	1	1	1	1
	Northwest Monroe Bath NH	1	1	1	1	1	1	1	1	1	1
	Southern Salem Derry NH	1	1	1	1	1	1	1	1	1	1
	Western Alstead Charlestown NH	1	1	1	1	1	1	1	1	1	1
Confidence Level	Montauk NY	High	High	Medium	High	High	High	High	High	High	High
	Northern Lebanon Hanover NH	High	High	Medium	High	High	High	High	High	High	High
	Northwest Monroe Bath NH	High	High	Medium	High	High	High	High	High	High	High
	Southern Salem Derry NH	High	High	Medium	High	High	High	High	High	High	High
	Western Alstead Charlestown NH	High	High	Medium	High	High	High	High	High	High	High

Energy Event Index for ALGONQUIN POWER

Valid Time: March 10, 2018 4:00 PM EST

Parameter	Region	Day 1	Day 2	Day 3	Day 4	Day 5	Day 6	Day 7	Day 8	Day 9	Day 10
Wind Speed	Montauk NY	1	1	1	1	1	1	1	1	1	1
	Northern Lebanon Hanover NH	1	1	1	1	1	1	1	1	1	1
	Northwest Monroe Bath NH	1	1	1	1	1	1	1	1	1	1
	Southern Salem Derry NH	1	1	1	1	1	1	1	1	1	1
	Western Alstead Charlestown NH	1	1	1	1	1	1	1	1	1	1
Wind/Gust	Montauk NY	1	1	1	1	1	1	1	1	1	1
	Northern Lebanon Hanover NH	1	1	1	1	1	1	1	1	1	1
	Northwest Monroe Bath NH	1	1	1	1	1	1	1	1	1	1
	Southern Salem Derry NH	1	1	1	1	1	1	1	1	1	1
	Western Alstead Charlestown NH	1	1	1	1	1	1	1	1	1	1
Snow	Montauk NY	1	1	1	1	1	1	1	1	1	1
	Northern Lebanon Hanover NH	1	1	1	2	2	1	1	1	1	1
	Northwest Monroe Bath NH	1	1	1	3	3	1	1	1	1	1
	Southern Salem Derry NH	1	1	1	3	3	1	1	1	1	1
	Western Alstead Charlestown NH	1	1	1	2	2	1	1	1	1	1
Ice	Montauk NY	1	1	1	1	1	1	1	1	1	1
	Northern Lebanon Hanover NH	1	1	1	1	1	1	1	1	1	1
	Northwest Monroe Bath NH	1	1	1	1	1	1	1	1	1	1
	Southern Salem Derry NH	1	1	1	1	1	1	1	1	1	1
	Western Alstead Charlestown NH	1	1	1	1	1	1	1	1	1	1
Confidence Level	Montauk NY	High	High	High	Medium	Medium	High	High	High	High	High
	Northern Lebanon Hanover NH	High	High	High	Medium	Medium	High	High	High	High	High
	Northwest Monroe Bath NH	High	High	High	Medium	Medium	High	High	High	High	High
	Southern Salem Derry NH	High	High	High	Medium	Medium	High	High	High	High	High
	Western Alstead Charlestown NH	High	High	High	Medium	Medium	High	High	High	High	High

Energy Event Index for ALGONQUIN POWER

Valid Time: March 11, 2018 8:00 AM EDT

Parameter	Region	Day 1	Day 2	Day 3	Day 4	Day 5	Day 6	Day 7	Day 8	Day 9	Day 10
Wind Speed	Montauk NY	1	1	1	1	1	1	1	1	1	1
	Northern Lebanon Hanover NH	1	1	1	1	1	1	1	1	1	1
	Northwest Monroe Bath NH	1	1	1	1	1	1	1	1	1	1
	Southern Salem Derry NH	1	1	1	1	1	1	1	1	1	1
	Western Alstead Charlestown NH	1	1	1	1	1	1	1	1	1	1
Wind/Gust	Montauk NY	1	1	1	1	1	1	1	1	1	1
	Northern Lebanon Hanover NH	1	1	1	1	1	1	1	1	1	1
	Northwest Monroe Bath NH	1	1	1	1	1	1	1	1	1	1
	Southern Salem Derry NH	1	1	1	1	1	1	1	1	1	1
	Western Alstead Charlestown NH	1	1	1	1	1	1	1	1	1	1
Snow	Montauk NY	1	1	1	1	1	1	1	1	1	1
	Northern Lebanon Hanover NH	1	1	2	2	1	1	1	1	1	1
	Northwest Monroe Bath NH	1	1	3	3	1	1	1	1	1	1
	Southern Salem Derry NH	1	1	3	3	1	1	1	1	1	1
	Western Alstead Charlestown NH	1	1	2	2	1	1	1	1	1	1
Ice	Montauk NY	1	1	1	1	1	1	1	1	1	1
	Northern Lebanon Hanover NH	1	1	1	1	1	1	1	1	1	1
	Northwest Monroe Bath NH	1	1	1	1	1	1	1	1	1	1
	Southern Salem Derry NH	1	1	1	1	1	1	1	1	1	1
	Western Alstead Charlestown NH	1	1	1	1	1	1	1	1	1	1
Confidence Level	Montauk NY	High	High	Medium	Medium	High	High	High	High	High	High
	Northern Lebanon Hanover NH	High	High	Medium	Medium	High	High	High	High	High	High
	Northwest Monroe Bath NH	High	High	Medium	Medium	High	High	High	High	High	High
	Southern Salem Derry NH	High	High	Medium	Medium	High	High	High	High	High	High
	Western Alstead Charlestown NH	High	High	Medium	Medium	High	High	High	High	High	High

Energy Event Index for ALGONQUIN POWER

Valid Time: March 11, 2018 4:00 PM EDT

Parameter	Region	Day 1	Day 2	Day 3	Day 4	Day 5	Day 6	Day 7	Day 8	Day 9	Day 10
Wind Speed	Montauk NY	1	1	1	1	1	1	1	1	1	1
	Northern Lebanon Hanover NH	1	1	1	1	1	1	1	1	1	1
	Northwest Monroe Bath NH	1	1	1	1	1	1	1	1	1	1
	Southern Salem Derry NH	1	1	1	1	1	1	1	1	1	1
	Western Alstead Charlestown NH	1	1	1	1	1	1	1	1	1	1
Wind/Gust	Montauk NY	1	1	1	1	1	1	1	1	1	1
	Northern Lebanon Hanover NH	1	1	1	1	1	1	1	1	1	1
	Northwest Monroe Bath NH	1	1	1	1	1	1	1	1	1	1
	Southern Salem Derry NH	1	1	1	1	1	1	1	1	1	1
	Western Alstead Charlestown NH	1	1	1	1	1	1	1	1	1	1
Snow	Montauk NY	1	1	1	1	1	1	1	1	1	1
	Northern Lebanon Hanover NH	1	1	3	3	1	1	1	1	1	1
	Northwest Monroe Bath NH	1	1	3	3	1	1	1	1	1	1
	Southern Salem Derry NH	1	1	3	3	1	1	1	1	1	1
	Western Alstead Charlestown NH	1	1	3	3	1	1	1	1	1	1
Ice	Montauk NY	1	1	1	1	1	1	1	1	1	1
	Northern Lebanon Hanover NH	1	1	1	1	1	1	1	1	1	1
	Northwest Monroe Bath NH	1	1	1	1	1	1	1	1	1	1
	Southern Salem Derry NH	1	1	1	1	1	1	1	1	1	1
	Western Alstead Charlestown NH	1	1	1	1	1	1	1	1	1	1
Confidence Level	Montauk NY	High	High	High	High	High	High	High	High	High	High
	Northern Lebanon Hanover NH	High	High	High	High	High	High	High	High	High	High
	Northwest Monroe Bath NH	High	High	High	High	High	High	High	High	High	High
	Southern Salem Derry NH	High	High	High	High	High	High	High	High	High	High
	Western Alstead Charlestown NH	High	High	High	High	High	High	High	High	High	High

THIS PAGE INTENTIONALLY LEFT BLANK

Appendix *B*

Liberty Utilities Daily Weather Summaries

DATE: Monday, March 05, 2018

	Weather Condition	Weather Severity	Area(s) Impacted	Actions Taken	Comments
Today	Snow	Scattered Amount: ¼-1"	All Service Areas	No Action Necessary ☒ Notified Operations ☐ Who: When: How:	Hazardous Weather Outlook
Tuesday	Fair Weather	..... Amount:	All Electric Areas	No Action Necessary ☒ Notified Operations ☐ Who: When: How:	
Wednesday	Snow Windy	Normal Consistantcy Amount: 1-5"	All Service Areas	No Action Necessary ☐ Notified Operations ☒ Who: Ele Ops When: 3/5/18 How: email	Winter Storm Watch Snow begins late afternoon becoming moderate into the evening hours.
Thursday	Snow Windy	Normal Consistantcy Amount: 3-7"	All Service Areas	No Action Necessary ☐ Notified Operations ☒ Who: Ele Ops When: 3/5/18 How: email	
Friday	Snow	Flurries Amount: <1/4"	Charlestown/Lebanon	No Action Necessary ☒ Notified Operations ☐ Who: When: How:	
Saturday	Fair Weather	..... Amount:	Choose an item	No Action Necessary ☒ Notified Operations ☐ Who: When: How:	
Sunday	Fair Weather	..... Amount:	Choose an item	No Action Necessary ☒ Notified Operations ☐ Who: When: How:	
> 7 DAYS	.....			No Action Necessary ☒ Notified Operations ☐ Who: When: How:	3/12 Rain in Salem 3/12 Flurries in all other areas 3/13 Snow/Rain all areas 1-3

DATE: Tuesday, March 06, 2018

	Weather Condition	Weather Severity	Area(s) Impacted	Actions Taken	Comments
Today	Fair Weather	..... Amount:	All Service Areas	**No Action Necessary** ☒ **Notified Operations** ☐ **Who:** **When:** **How:**	Hazardous Weather Outlook
Wednesday	Snow Windy	Wet Consistancy Amount: 3-7"	All Service Areas	**No Action Necessary** ☐ **Notified Operations** ☒ **Who: Ele Ops** **When: 3/6/18** **How:** email	Winter Storm Warning Heavy wet snow expected in all areas **EEI-4 in Salem/Manchester**
Thursday	Snow Tropical Storm	Wet Consistancy Amount: 5-10"	All Service Areas	**No Action Necessary** ☐ **Notified Operations** ☒ **Who: Ele Ops** **When: 3/6/18** **How:** email	Winter Storm Warning Heavy wet snow expected in all areas **EEI-4 in Salem/Manchester**
Friday	Fair Weather	..... Amount:	All Service Areas	**No Action Necessary** ☒ **Notified Operations** ☐ **Who:** **When:** **How:**	
Saturday	Fair Weather	..... Amount:	All Service Areas	**No Action Necessary** ☒ **Notified Operations** ☐ **Who:** **When:** **How:**	
Sunday	Fair Weather	..... Amount:	All Service Areas	**No Action Necessary** ☒ **Notified Operations** ☐ **Who:** **When:** **How:**	
Monday	Rain Snow	Light Amount: ¼-1"	Salem Manchester	**No Action Necessary** ☒ **Notified Operations** ☐ **Who:** **When:** **How:**	
> 7 DAYS	.....			**No Action Necessary** ☒ **Notified Operations** ☐ **Who:** **When:** **How:**	3/13 Snow/Rain in Salem & Manchester ¼-1"

DATE: Wednesday, March 07, 2018

	Weather Condition	Weather Severity	Area(s) Impacted	Actions Taken	Comments
Today	Snow Windy	Wet Consistancy Amount: 12-18"	All Service Areas	No Action Necessary ☒ Notified Operations ☒ Who: When: How:	Level 4 High Confidence (Salem NH) Snow begins slowly between 1-2pm. Heaviest snow fall between 11pm - 5am Thursday 12-18" 30-40mph gusts. Level 3 High Confidence (Lebanon/Charlestown NH) Snow will start after 1pm. Will continue into Thursday ending between 10-11pm. Amounts 7-10" total.
Thursday	Snow Windy	Wet Consistancy	All Service Areas	No Action Necessary ☒ Notified Operations ☐ Who: When: How:	Snow will continue for Salem ending around 5 am. Total amounts 12-18" Snow will continue into the evening for Lebanon/Charlestown total amounts 7-10"
Friday	Snow	Scattered	All Service Areas	No Action Necessary ☒ Notified Operations ☐ Who: When: How:	Flurries expected for all locations < ¼"
Saturday	Snow	Scattered Amount: < ¼"	All Service Areas	No Action Necessary ☒ Notified Operations ☐ Who: When: How:	Flurries expected for all locations < ¼"
Sunday	Fair Weather	.....	All Service Areas	No Action Necessary ☒ Notified Operations ☐ Who: When: How:	
Monday	Rain	Scattered	Salem	No Action Necessary ☒ Notified Operations ☐ Who: When: How:	
Tuesday	Snow Rain	Scattered	All Service Areas	No Action Necessary ☒ Notified Operations ☐ Who: When: How:	Mix rain/snow for all service locations ¼ -1"
> 7 DAYS	.....			No Action Necessary ☒ Notified Operations ☐ Who: When: How:	3/18, 3/19 and 3/20 rain and possible snow mix for all service locations.

DATE: Thursday, March 08, 2018

	Weather Condition	Weather Severity	Area(s) Impacted	Actions Taken	Comments
Today	Snow Windy	Wet Consistancy Amount: 3-5"	All Service Areas	No Action Necessary ☒ Notified Operations ☒ Who: When: How:	Level 3 High Confidence (Salem) Snow will continue for Salem 1-3"- Level 4 High Confidence (Lebanon/Charlestown NH) Snow will continue into the Lebanon/Charlestown- 3-5"
Friday	Snow Windy	Normal Consistantcy Amount: ¼-1"	All Service Areas	No Action Necessary ☒ Notified Operations ☐ Who: When: How:	PM snow flurries in all service areas.
Saturday	Fair Weather	.....	All Service Areas	No Action Necessary ☒ Notified Operations ☐ Who: When: How:	
Sunday	Fair Weather	..... Amount:	All Service Areas	No Action Necessary ☒ Notified Operations ☐ Who: When: How:	
Monday	Snow	Normal Consistantcy Amount:1-3"	All Service Areas	No Action Necessary ☒ Notified Operations ☐ Who: When: How:	
Tuesday	Snow	Normal Consistantcy Amount: 1-3"	Salem	No Action Necessary ☒ Notified Operations ☐ Who: When: How:	
Wednesday	Snow Rain	Scattered	All Service Areas	No Action Necessary ☒ Notified Operations ☐ Who: When: How:	
> 7 DAYS	.....			No Action Necessary ☒ Notified Operations ☐ Who: When: How:	3/18, 3/19 and 3/20 rain and possible snow mix for all service locations.

DATE: Friday, March 09, 2018

	Weather Condition	Weather Severity	Area(s) Impacted	Actions Taken	Comments
Today	Snow	Normal Consistantcy Amount: 1-3"	Charlestown	No Action Necessary ☒ Notified Operations ☐ Who: When: How:	PM snow flurries in all service areas.
Saturday	Windy	.....	All Service Areas	No Action Necessary ☒ Notified Operations ☐ Who: When: How:	Wind gust up to 25mph in all service areas.
Sunday	Fair Weather	.....	All Service Areas	No Action Necessary ☒ Notified Operations ☐ Who: When: How:	
Monday	Fair Weather	Flurries Amount: <1/4"	All Service Areas	No Action Necessary ☒ Notified Operations ☐ Who: When: How:	PM Flurries possible
Tuesday	Snow	Normal Consistantcy Amount:1-3"	All Service Areas	No Action Necessary ☒ Notified Operations ☐ Who: When: How:	
Wednesday	Snow	Flurries Amount: <1/4"	All Service Areas	No Action Necessary ☒ Notified Operations ☐ Who: When: How:	Isolated Flurries in all service areas.
Thursday	Snow	Flurries Amount: <1/4"	All Service Areas	No Action Necessary ☒ Notified Operations ☐ Who: When: How:	
> 7 DAYS	.....			No Action Necessary ☒ Notified Operations ☐ Who: When: How:	3/18, 3/19 and 3/20 rain and possible snow mix for all service locations.

DATE: Saturday, March 10, 2018

	Weather Condition	Weather Severity	Area(s) Impacted	Actions Taken	Comments
Today	Snow Windy	Flurries Amount: ¼" – 1"	All Service Areas	No Action Necessary ☒ Notified Operations ☐ Who: When: How:	Flurries in all service areas. Wind gusts possible up to 25mph, in all service areas from mid – late afternoon.
Sunday	Fair Weather	.....	All Service Areas	No Action Necessary ☒ Notified Operations ☐ Who: When: How:	
Monday	Fair Weather	.....	All Service Areas	No Action Necessary ☒ Notified Operations ☐ Who: When: How:	Evening Flurries in Lebanon/Charlestown
Tuesday	Snow	Normal Consistantcy Amount: 1-5"	All Service Areas	No Action Necessary ☒ Notified Operations ☐ Who: When: How:	
Wednesday	Snow	Flurries Amount: <1/4"	All Service Areas	No Action Necessary ☒ Notified Operations ☐ Who: When: How:	Isolated flurries in all service areas.
Thursday	Fair Weather	.....	All Service Areas	No Action Necessary ☒ Notified Operations ☐ Who: When: How:	
Friday	Fair Weather	.....	All Service Areas	No Action Necessary ☒ Notified Operations ☐ Who: When: How:	
> 7 DAYS	.....			No Action Necessary ☒ Notified Operations ☐ Who: When: How:	3/18, 3/19 and 3/20 rain and possible snow mix for all service locations.

DATE: Sunday, March 11, 2018

	Weather Condition	Weather Severity	Area(s) Impacted	Actions Taken	Comments
Today	Fair Weather	.....	All Service Areas	**No Action Necessary** ☒ **Notified Operations** ☐ **Who:** **When:** **How:**	
Monday	Fair Weather	.....	All Service Areas	**No Action Necessary** ☒ **Notified Operations** ☐ **Who:** **When:** **How:**	PM flurries possible in Lebanon/Charlestown - <1/4"
Tuesday	Snow Windy	Dry-Normal Consistency Amount: 6"-12" Wind Gusts 25-30mph Peak: 40-45mph	Salem Charlestown/Lebanon	**No Action Necessary** ☐ **Notified Operations** ☒ **Who: ELE OPS** **When: 3/10 & 3/11** **How:** Email	Level 3 EEI Snow Event (Salem) Level 2 EEI Snow Event (Lebanon/Charlestown) Snow fall occurs between 7a-7p on Tuesday w/ 1" per hour snowfall rates possible between 12pm-6pm. Snow fall accumulations: 8-12" Salem/Monroe, 6-10" Lebanon/Charlestown. Wind gusts 25-35mph / Peak gusts 40-45mph across Salem.
Wednesday	Snow	Normal Consistency Amount: 1-5"	All Service Areas	**No Action Necessary** ☒ **Notified Operations** ☐ **Who:** **When:** **How:**	
Thursday	Snow	Flurries Amount: <1/4"	All Service Areas	**No Action Necessary** ☒ **Notified Operations** ☐ **Who:** **When:** **How:**	Isolated flurries in all service areas.
Friday	Fair Weather	.....	All Service Areas	**No Action Necessary** ☒ **Notified Operations** ☐ **Who:** **When:** **How:**	
Saturday	Fair Weather	.....	All Service Areas	**No Action Necessary** ☒ **Notified Operations** ☐ **Who:** **When:** **How:**	
> 7 DAYS	.....			**No Action Necessary** ☒ **Notified Operations** ☐ **Who:** **When:** **How:**	3/18, 3/19 and 3/20 rain and possible snow mix for all service locations.

THIS PAGE INTENTIONALLY LEFT BLANK

Appendix *C*

Liberty Utilities Storm Planning Reports

DATE: Tuesday, March 06, 2018
TIME: 3:00 PM Winter Storm Quinn

	Lebanon	Salem	Charlestown	Comments
Weather Forecast	Snow to begin early Wed continuing into Thurs. Heaviest between 5pm Wed to 7am Thurs. 7 to 10" inches. Peak gusts 20-30 mph. Consistency will be heavy wet snow.	Snow to begin early Wed continuing into Thurs. Heaviest between 5pm Wed to 4am Thurs. 12 to 18" inches. Peak gusts 30-40 mph. Consistency will be heavy wet snow.	Snow to begin early Wed continuing into Thurs. Heaviest between 5pm Wed to 7am Thurs. 10 to 14" inches. Peak gusts 20-30 mph. Consistency will be heavy wet snow.	
Anticipated EERP Event Type	Type 2	Type 2	Type 2	
Resources - *only 9 internal crews due to vacancies and injuries/light duty.				**Totals**
Internal Crews	2.5	5.5	1	9
Contractor Crews	2	4		6
Total Line Crews available	4.5	9.5	1	15
Tree Crews	4	7	1	12
Wires Down	Will be staffed	Will be staffed	Will be staffed	
Other Support	Will be staffed	Will be staffed	Will be staffed	
LU Storm Room Status	N/A	N/A	N/A	
LU Municipal Room Status	closed			
Customer Outage Count	N/A	N/A	N/A	
Estimated Date/Time for Total Restoration	N/A	N/A	N/A	
Planned Storm Conference Calls	Next Call at 4:00 pm 3/7/18			
Notifications with Regulators. NHPUC/NH OEM	Planning Report			

All wires down and support staff will be staffed 24/7 for the Wed thru Fri. Customer service will also be staffed 24/7 for the duration of the storm and restoration.

EII Event Index & Storm Accounting

Description	GP Expense Job	GP VM Job
EII – Level 3/4 High Confidence	STORM-EXP-1807	STORM-VGMT-1807

DATE: Wednesday, March 07, 2018
TIME: 4:00 PM Winter Storm Quinn

	Lebanon	Salem	Charlestown	Comments
Weather Forecast	Snow will develop becoming heavy from 5pm to 11pm. Snow acc. 8-12". Gust up to 25-30 MPH. Consistency of snow is Normal.	Snow will continue becoming heavy from 6pm to 4am. Snow acc. 10-14". Gusts 25-35 MPH. Consistency of snow is Normal – Wet.	Snow will develop becoming heavy from 5pm to 11pm. Snow acc. 8-12". Gust up to 25-30 MPH. Consistency of snow is Normal.	
Anticipated EERP Event Type	Type 2	Type 2	Type 2	
Resources - *only 9 internal crews due to vacancies and injuries/light duty.				**Totals**
Internal Crews	2.5	5.5	1	9
Contractor Crews	4	4		8
Total Line Crews available	6.5	9.5	1	17
Tree Crews	4	7	1	12
Wires Down	Will be staffed	Will be staffed	Will be staffed	
Other Support	Will be staffed	Will be staffed	Will be staffed	
LU Storm Room Status	N/A	N/A	N/A	
LU Municipal Room Status	Open			Will be open 24/7 for duration of event
Customer Outage Count	N/A	N/A	N/A	
Estimated Date/Time for Total Restoration	N/A	N/A	N/A	
Planned Storm Conference Calls	Next Call at 4:00 pm 3/7/18 Next Call at 10:00 am 3/8/18			
Notifications with Regulators. NHPUC/NH OEM	Planning Report			

All wires down and support staff will be staffed 24/7 for the Wed thru Fri. Customer service will also be staffed 24/7 for the duration of the storm and restoration.

EII Event Index & Storm Accounting

Description	GP Expense Job	GP VM Job
EII – Level 3/4 High Confidence	STORM-EXP-1807	STORM-VGMT-1807

DATE: Thursday, March 08, 2018
TIME: 10:00 PM Winter Storm Quinn

	Lebanon	Salem	Charlestown	Comments
Weather Forecast	Light snow throughout the day with possible additional 1" of snow.	Light snow throughout the day with possible additional 1" of snow.	Light snow throughout the day with possible additional 1" of snow.	
Anticipated EERP Event Type	Type 1	Type 1	Type 1	
Resources - *only 9 internal crews due to vacancies and injuries/light duty.				**Totals**
Internal Crews	2.5	5.5	1	9
Contractor Crews		8		8
Total Line Crews available	6.5	9.5	1	17
Tree Crews		11	1	12
Wires Down	Will be staffed	Will be staffed	Will be staffed	
Other Support	Will be staffed	Will be staffed	Will be staffed	
				All wires down and support staff will be staffed 24/7 for the Wed thru Fri. Customer service will also be staffed 24/7 for the duration of the storm and restoration.
LU Storm Room Status	N/A	N/A	N/A	
LU Municipal Room Status	Open			Will be open 24/7 for duration of event
Customer Outage Count	0	18,231	0	Salem/Pelham/Windham and Derry area.
Estimated Date/Time for Total Restoration	N/A	N/A	N/A	We will continue to work around the clock to have 99% of customers back in power by Sunday 6:00 pm.
Planned Storm Conference Calls	Next Call at 4:00 pm 3/7/18 Next Call at 10:00 am 3/8/18 Next Call at 4:00 pm 3/8/18			
Notifications with Regulators. NHPUC/NH OEM	Planning Report			

EII Event Index & Storm Accounting

Description	GP Expense Job	GP VM Job
EII – Level 3/4 High Confidence	STORM-EXP-1807	STORM-VGMT-1807

DATE: Thursday, March 08, 2018
TIME: 4:00 PM Winter Storm Quinn

	Lebanon	Salem	Charlestown	Comments
Weather Forecast	Light snow throughout the day with possible additional 1" of snow.	Light snow throughout the day with possible additional 1" of snow.	Light snow throughout the day with possible additional 1" of snow.	Clear weather for the remainder of the weekend.
Anticipated EERP Event Type	Type 1	Type 1	Type 1	
Resources - *only 9 internal crews due to vacancies and injuries/light duty.				Totals
Internal Crews	2.5	5.5	1	9
Contractor Crews		11		11
Total Line Crews available	2.5	16.5	1	20
Tree Crews		20	1	21
Wires Down	Will be staffed	Will be staffed	Will be staffed	
Other Support	Will be staffed	Will be staffed	Will be staffed	
LU Storm Room Status	N/A	N/A	N/A	
LU Municipal Room Status	Closed	Open		Will be open 24/7 for duration of event. Lebanon Storm room closed.
Customer Outage Count	0	13,484	0	Salem/Pelham/Windham and Derry area.
Estimated Date/Time for Total Restoration	N/A	N/A	N/A	We will continue to work around the clock to have 99% of customers back in power by Sunday 6:00 pm.
Planned Storm Conference Calls	Next Call at 4:00 pm 3/7/18 Next Call at 10:00 am 3/8/18 Next Call at 4:00 pm 3/8/18 Next call at 10:00 am 3/9/18			
Notifications with Regulators. NHPUC/NH OEM	Planning Report			

All wires down and support staff will be staffed 24/7 for the Wed thru Fri. Customer service will also be staffed 24/7 for the duration of the storm and restoration. 12 damage assessment personnel.

EII Event Index & Storm Accounting

Description	GP Expense Job	GP VM Job
EII – Level 3/4 High Confidence	STORM-EXP-1807	STORM-VGMT-1807

DATE: Friday, March 09, 2018
TIME: 10:00 AM Winter Storm Quinn

	Lebanon	Salem	Charlestown	Comments
Weather Forecast	Fair weather with possible light flurries this afternoon.	Fair weather with possible light flurries this afternoon	Fair weather with possible light flurries this afternoon	Clear weather for the remainder of the weekend. Wind gust up to 25 mph on Saturday afternoon are possible.
Anticipated EERP Event Type	Type 1	Type 1	Type 1	
Resources - *only 9 internal crews due to vacancies and injuries/light duty.				**Totals**
Internal Crews	2.5	5.5	1	9
Contractor Crews		15		15
Total Line Crews available	2.5	20.5	1	24
Tree Crews		21	1	22
Wires Down	Will be staffed	Will be staffed	Will be staffed	
Other Support	Will be staffed	Will be staffed	Will be staffed	
LU Storm Room Status	N/A	N/A	N/A	
LU Municipal Room Status	Closed	Open		Will be open 24/7 for duration of event. Lebanon Storm room closed.
Customer Outage Count	0	9,352	0	Salem/Pelham/Windham and Derry area. 3000 customers to be picked up by 3:00 pm today.
Estimated Date/Time for Total Restoration	N/A	N/A	N/A	We will continue to work around the clock to have 99% of customers back in power by Sunday 6:00 pm.
Planned Storm Conference Calls	Next Call at 4:00 pm 3/7/18 Next Call at 10:00 am 3/8/18 Next Call at 4:00 pm 3/8/18 Next call at 10:00 am 3/9/18 Next Call at 4:00 pm 3/9/18			
Notifications with Regulators. NHPUC/NH OEM	Planning Report			
EII Event Index & Storm Accounting	Description	GP Expense Job	GP VM Job	
	EII – Level 3/4 High Confidence	STORM-EXP-1807	STORM-VGMT-1807	

All wires down and support staff will be staffed 24/7 for the Wed thru Fri. Customer service will also be staffed 24/7 for the duration of the storm and restoration. 12 damage assessment personnel.

DATE: Friday, March 09, 2018
TIME: 4:00 PM Winter Storm Quinn

	Lebanon	Salem	Charlestown	Comments
Weather Forecast	Fair weather with possible light flurries this afternoon.	Fair weather with possible light flurries this afternoon	Fair weather with possible light flurries this afternoon	Clear weather for the remainder of the weekend. Wind gust up to 25 mph on Saturday afternoon are possible.
Anticipated EERP Event Type	Type 1	Type 1	Type 1	
Resources - *only 9 internal crews due to vacancies and injuries/light duty.				**Totals**
Internal Crews	2.5	5.5	1	9
Contractor Crews		15		15
Total Line Crews available	2.5	26.5	1	30
Tree Crews		21		21
Wires Down	Will be staffed	Will be staffed	Will be staffed	
Other Support	Will be staffed	Will be staffed	Will be staffed	
LU Storm Room Status	N/A	N/A	N/A	
LU Municipal Room Status	Closed	Open		Salem Storm room will be staffed 7 am to 7 pm for the weekend. Overnight coverage will be handled by Dispatch.
Customer Outage Count	0	7,328	0	Salem/Pelham/Windham and Derry area. 3000 customers were picked up due to National Grid Transmission line being restored to Spicket River Sub Station.
Estimated Date/Time for Total Restoration	N/A	N/A	N/A	We will continue to work around the clock to have 99% of customers back in power by Sunday 6:00 pm.
Planned Storm Conference Calls	Next Call at 4:00 pm 3/7/18 Next Call at 10:00 am 3/8/18 Next Call at 4:00 pm 3/8/18 Next call at 10:00 am 3/9/18 Next Call at 4:00 pm 3/9/18 Next Call at 10:00 am 3/10/18			
Notifications with Regulators. NHPUC/NH OEM	Planning Report			
EII Event Index & Storm Accounting	Description	GP Expense Job	GP VM Job	
	EII – Level 3/4 High Confidence	STORM-EXP-1807	STORM-VGMT-1807	

All wires down and support staff will be staffed 24/7 for the duration of event. Customer service will also be staffed 24/7 for the duration of the storm and restoration. 12 damage assessment personnel.

4 Eversource
6 Unitil
4 Green Mountain

DATE: Saturday, March 10, 2018
TIME: 10:00 AM Winter Storm Quinn

	Lebanon	Salem	Charlestown	Comments
Weather Forecast	Fair weather with possible light flurries this afternoon.	Fair weather with possible light flurries this afternoon	Fair weather with possible light flurries this afternoon	Clear weather for the remainder of the weekend. Wind gust up to 25 mph on Saturday afternoon are possible.
Anticipated EERP Event Type	Type 1	Type 1	Type 1	
Resources - *only 9 internal crews due to vacancies and injuries/light duty.				**Totals**
Internal Crews	2.5	5.5	1	9
Contractor Crews		21		15
Total Line Crews available	2.5	26.5	1	30
Tree Crews		21		21
Wires Down	Will be staffed	Will be staffed	Will be staffed	
Other Support	Will be staffed	Will be staffed	Will be staffed	
LU Storm Room Status	N/A	N/A	N/A	
LU Municipal Room Status	Closed	Open		Salem Storm room will be staffed 7 am to 7 pm for the weekend. Overnight coverage will be handled by Dispatch.
Customer Outage Count	0	3,400	0	We are having some IT issues with our OMS system and the customer facing map is inaccurate. We continue to make progress and our customer count is much lower than showing.
Estimated Date/Time for Total Restoration	N/A	N/A	N/A	We remain working around the clock to restore as many customers as possible by 6:00 PM Sunday.
Planned Storm Conference Calls	Next Call at 4:00 pm 3/7/18 Next Call at 10:00 am 3/8/18 Next Call at 4:00 pm 3/8/18 Next call at 10:00 am 3/9/18 Next Call at 4:00 pm 3/9/18 Next Call at 10:00 am 3/10/18 Next Call at 4:00 pm 3/10/18			
Notifications with Regulators. NHPUC/NH OEM	Planning Report			
EII Event Index & Storm Accounting	Description	GP Expense Job	GP VM Job	
	EII – Level 3/4 High Confidence	STORM-EXP-1807	STORM-VGMT-1807	

All wires down and support staff will be staffed 24/7 for the duration of event. Customer service will also be staffed 24/7 for the duration of the storm and restoration. We are increasing our damage assessment personnel.

4 Eversource
6 Unitil
4 Green Mountain
6 Canadian Crews

DATE: Saturday, March 10, 2018
TIME: 4:00 PM Winter Storm Quinn

	Lebanon	Salem	Charlestown	Comments
Weather Forecast	Fair weather with possible light flurries this afternoon.	Fair weather with possible light flurries this afternoon	Fair weather with possible light flurries this afternoon	Next chance for a snow event is Tuesday Evening. Medium confidence at this time for >6" in Charlestown/Lebanon and >8" in Salem area.
Anticipated EERP Event Type	Type 1	Type 1	Type 1	
Resources - *only 9 internal crews due to vacancies and injuries/light duty.				**Totals**
Internal Crews		5.5		5.5
Contractor Crews		22		22
Total Line Crews available		27.5		27.5
Tree Crews		21		21
Wires Down	Will be staffed	Will be staffed	Will be staffed	
Other Support	Will be staffed	Will be staffed	Will be staffed	
LU Storm Room Status	N/A	N/A	N/A	
LU Municipal Room Status	Closed	Open		Salem Storm room will be staffed 7 am to 7 pm for the weekend. Overnight coverage will be handled by Dispatch.
Customer Outage Count	0	1,584	0	We are having some IT issues with our OMS system and the customer facing map is inaccurate. We continue to make progress and our customer count is much lower than showing.
Estimated Date/Time for Total Restoration	N/A	N/A	N/A	We remain working around the clock to restore as many customers as possible by 6:00 PM Sunday.
Planned Storm Conference Calls	Next Call at 4:00 pm 3/7/18 Next Call at 10:00 am 3/8/18 Next Call at 4:00 pm 3/8/18 Next call at 10:00 am 3/9/18 Next Call at 4:00 pm 3/9/18 Next Call at 10:00 am 3/10/18 Next Call at 4:00 pm 3/10/18 Next Call 10:00 am 3/11/18			
Notifications with Regulators. NHPUC/NH OEM	Planning Report			

All wires down and support staff will be staffed 24/7 for the duration of event. Customer service will also be staffed 24/7 for the duration of the storm and restoration. We are increasing our damage assessment personnel.

4 Eversource
6 O'Donnell
4 Green Mountain

EII Event Index & Storm Accounting

Description	GP Expense Job	GP VM Job
EII – Level 3/4 High Confidence	STORM-EXP-1807	STORM-VGMT-1807

DATE: Sunday, March 11, 2018
TIME: 10:00 AM Winter Storm Quinn

	Lebanon	Salem	Charlestown	Comments
Weather Forecast	Fair weather with possible light flurries this afternoon.	Fair weather with possible light flurries this afternoon	Fair weather with possible light flurries this afternoon	Next chance for a snow event is Tuesday Evening. Medium confidence at this time for >6" in Charlestown/Lebanon and >8" in Salem area.
Anticipated EERP Event Type	Type 1	Type 1	Type 1	
Resources - *only 9 internal crews due to vacancies and injuries/light duty.				**Totals**
Internal Crews		5.5		5.5
Contractor Crews		22		22
Total Line Crews available		27.5		27.5
Tree Crews		21		21
Wires Down	Will be staffed	Will be staffed	Will be staffed	
Other Support	Will be staffed	Will be staffed	Will be staffed	
LU Storm Room Status	N/A	N/A	N/A	
LU Municipal Room Status	Closed	Open		Salem Storm room will be staffed 7 am to 7 pm for the weekend. Overnight coverage will be handled by Dispatch.
Customer Outage Count	0	100	0	We are having some IT issues with our OMS system and the customer facing map is inaccurate. We continue to make progress and our customer count is much lower than showing.
Estimated Date/Time for Total Restoration	N/A	N/A	N/A	We remain working around the clock to restore as many customers as possible by 6:00 PM Sunday.
Planned Storm Conference Calls	Next Call at 4:00 pm 3/7/18 Next Call at 10:00 am 3/8/18 Next Call at 4:00 pm 3/8/18 Next call at 10:00 am 3/9/18 Next Call at 4:00 pm 3/9/18 Next Call at 10:00 am 3/10/18 Next Call at 4:00 pm 3/10/18 Next Call 10:00 am 3/11/18 – Final Call for Quinn			
Notifications with Regulators. NHPUC/NH OEM	Planning Report			
EII Event Index & Storm Accounting	Description	GP Expense Job	GP VM Job	
	EII – Level 3/4 High Confidence	STORM-EXP-1807	STORM-VGMT-1807	

All wires down and support staff will be staffed 24/7 for the duration of event. Customer service will also be staffed 24/7 for the duration of the storm and restoration. We are increasing our damage assessment personnel.

4 Eversource
6 O'Donnell
4 Green Mountain

DATE: Sunday, March 11, 2018
TIME: Winter Storm Quinn

	Lebanon	Salem	Charlestown	Comments
Weather Forecast	Fair weather with possible light flurries this afternoon.	Fair weather with possible light flurries this afternoon	Fair weather with possible light flurries this afternoon	Next chance for a snow event is Tuesday Evening. Medium confidence at this time for >6" in Charlestown/Lebanon and >8" in Salem area.
Anticipated EERP Event Type	Type 1	Type 1	Type 1	
Resources - *only 9 internal crews due to vacancies and injuries/light duty.				**Totals**
Internal Crews		5.5		5.5
Contractor Crews				
Total Line Crews available				
Tree Crews				
Wires Down	Will be staffed	Will be staffed	Will be staffed	
Other Support	Will be staffed	Will be staffed	Will be staffed	
LU Storm Room Status	N/A	N/A	N/A	
LU Municipal Room Status	Closed	Closed		
Customer Outage Count	0	0	0	
Estimated Date/Time for Total Restoration	N/A	N/A	N/A	We have completed restoration to our customers.
Planned Storm Conference Calls	Next Call at 4:00 pm 3/7/18 Next Call at 10:00 am 3/8/18 Next Call at 4:00 pm 3/8/18 Next call at 10:00 am 3/9/18 Next Call at 4:00 pm 3/9/18 Next Call at 10:00 am 3/10/18 Next Call at 4:00 pm 3/10/18 Next Call 10:00 am 3/11/18 – Final Call for Quinn			
Notifications with Regulators. NHPUC/NH OEM	Planning Report			

@17:30 the Salem Storm closed. All dispatching duties have been switched to Londonderry. There will be crews on property for the evening/over night shift if needed.

Customer service was released at 1:00 PM Sunday.

EII Event Index & Storm Accounting

Description	GP Expense Job	GP VM Job
EII – Level 3/4 High Confidence	STORM-EXP-1807	STORM-VGMT-1807

Appendix *D*

NH PUC E-33 Forms

NEW HAMPSHIRE PUBLIC UTILITIES COMMISSION
DISTRIBUTION CREW REPORT
(In compliance with Puc 308.14)

	EVENT NAME		Winter Storm Quinn				
	DATE REPORT SUBMITTED:		03/08/18	TIME - DATA EXTRACTED:		10:00 AM	
	Submitted by:		Chuck Rodrigues				
	Company:		Liberty Utilities				
Quantity of Field Personnel					Prior to Event[A]	During Event	Incremental
			FRONT LINE				
1	**Distribution** 69 KV and Less includes Subtransmission 46kv, 34.5kv,22kv, 13kv, 7.5 kv, 4kv, 2kv and below	Line	Company Line Crews restoring Distribution Circuits		9	9	0
			Affiliate Co Line Crews restoring Distribution Circuits		0	0	0
			Contractor Line Crews restoring Distribution Circuits		2	8	6
			Foreign Utility Line Crews restoring Distribution Circuits		0	0	0
		Service	Company Line Crews restoring Service		0	0	0
			Contractors restoring Service *includes Electricans*		0	0	0
		Pole[B]	Pole Setting/Digging Operations *includes Co, Foreign Uitlity, Contractor*		3	5	2
		Tree	Contractor Tree Clearing - Working on Distribution Circuits		10	12	2
			Foreign Utility Tree Clearing - Working on Distribution Circuits		0	0	0
				SUBTOTAL	24	34	10
			FIELD ASSESSMENT				
2	Distribution *see above*	Line[C]	Company Damage Assessment Personnel		0	12	12
				SUBTOTAL	0	12	12
			PUBLIC SAFETY				
3	Wires Down Appraiser Field Guides Other Support	Line	Company Personnel		0	3	3
			Bird Dogs, Location Guides			0	0
			includes contractors				0
				SUBTOTAL	0	3	3
				GRAND TOTAL	24	49	25

NEW HAMPSHIRE PUBLIC UTILITIES COMMISSION
DISTRIBUTION CREW REPORT
(In compliance with Puc 308.14)

	EVENT NAME		Winter Storm Quinn				
	DATE REPORT SUBMITTED:		03/08/18	TIME - DATA EXTRACTED:		2:00 p.m.	
	Submitted by:		Chuck Rodrigues				
	Company:		Liberty Utilities				
Quantity of Field Personnel					Prior to Event[A]	During Event	Incremental
			FRONT LINE				
1	**Distribution** 69 KV and Less includes Subtransmission 46kv, 34.5kv,22kv, 13kv, 7.5 kv, 4kv, 2kv and below	Line	Company Line Crews restoring Distribution Circuits		9	9	0
			Affiliate Co Line Crews restoring Distribution Circuits		0	0	0
			Contractor Line Crews restoring Distribution Circuits		2	8	6
			Foreign Utility Line Crews restoring Distribution Circuits		0	0	0
		Service	Company Line Crews restoring Service		0	0	0
			Contractors restoring Service *includes Electricans*		0	0	0
		Pole[B]	Pole Setting/Digging Operations *includes Co, Foreign Uitlity, Contractor*		3	5	2
		Tree	Contractor Tree Clearing - Working on Distribution Circuits		10	12	2
			Foreign Utility Tree Clearing - Working on Distribution Circuits		0	0	0
				SUBTOTAL	24	34	10
			FIELD ASSESSMENT				
2	Distribution *see above*	Line[C]	Company Damage Assessment Personnel		0	12	12
				SUBTOTAL	0	12	12
			PUBLIC SAFETY				
3	Wires Down Appraiser Field Guides Other Support	Line	Company Personnel		0	9	9
			Bird Dogs, Location Guides			0	0
			includes contractors				0
				SUBTOTAL	0	9	9
				GRAND TOTAL	24	55	31

NEW HAMPSHIRE PUBLIC UTILITIES COMMISSION
DISTRIBUTION CREW REPORT
(In compliance with Puc 308.14)

	EVENT NAME		Winter Storm Quinn				
	DATE REPORT SUBMITTED:		03/08/18	TIME - DATA EXTRACTED:		6:00 p.m.	
	Submitted by:		Chuck Rodrigues				
	Company:		Liberty Utilities				
Quantity of Field Personnel					Prior to Event[A]	During Event	Incremental
			FRONT LINE				
1	**Distribution** 69 KV and Less includes Subtransmission 46kv, 34.5kv,22kv, 13kv, 7.5 kv, 4kv, 2kv and below	Line	Company Line Crews restoring Distribution Circuits		9	9	0
			Affiliate Co Line Crews restoring Distribution Circuits		0	0	0
			Contractor Line Crews restoring Distribution Circuits		2	11	9
			Foreign Utility Line Crews restoring Distribution Circuits		0	0	0
		Service	Company Line Crews restoring Service		0	0	0
			Contractors restoring Service *includes Electricans*		0	0	0
		Pole[B]	Pole Setting/Digging Operations *includes Co, Foreign Uitlity, Contractor*		3	3	0
		Tree	Contractor Tree Clearing - Working on Distribution Circuits		10	21	11
			Foreign Utility Tree Clearing - Working on Distribution Circuits		0	0	0
				SUBTOTAL	24	44	20
			FIELD ASSESSMENT				
2	Distribution *see above*	Line[C]	Company Damage Assessment Personnel		0	2	2
				SUBTOTAL	0	2	2
			PUBLIC SAFETY				
3	Wires Down Appraiser Field Guides Other Support	Line	Company Personnel		0	6	6
			Bird Dogs, Location Guides			0	0
			includes contractors				0
				SUBTOTAL	0	6	6
				GRAND TOTAL	24	52	28

NEW HAMPSHIRE PUBLIC UTILITIES COMMISSION
DISTRIBUTION CREW REPORT
(In compliance with Puc 308.14)

	EVENT NAME		Winter Storm Quinn				
	DATE REPORT SUBMITTED:		4316800%	TIME - DATA EXTRACTED:		6:00 a.m.	
	Submitted by:		Chuck Rodrigues				
	Company:		Liberty Utilities				
Quantity of Field Personnel					Prior to Event[A]	During Event	Incremental
			FRONT LINE				
100%	**Distribution** 69 KV and Less includes Subtransmission 46kv, 34.5kv,22kv, 13kv, 7.5 kv, 4kv, 2kv and below	Line	Company Line Crews restoring Distribution Circuits		900%	900%	0%
			Affiliate Co Line Crews restoring Distribution Circuits		0%	0%	0%
			Contractor Line Crews restoring Distribution Circuits		200%	800%	600%
			Foreign Utility Line Crews restoring Distribution Circuits		0%	0%	0%
		Service	Company Line Crews restoring Service		0%	0%	0%
			Contractors restoring Service *includes Electricans*		0%	0%	0%
		Pole[B]	Pole Setting/Digging Operations *includes Co, Foreign Uitlity, Contractor*		300%	300%	0%
		Tree	Contractor Tree Clearing - Working on Distribution Circuits		1000%	2100%	1100%
			Foreign Utility Tree Clearing - Working on Distribution Circuits		0%	0%	0%
				SUBTOTAL	2400%	4100%	1700%
			FIELD ASSESSMENT				
200%	Distribution *see above*	Line[C]	Company Damage Assessment Personnel		0%	200%	200%
				SUBTOTAL	0%	200%	200%
			PUBLIC SAFETY				
300%	Wires Down Appraiser Field Guides Other Support	Line	Company Personnel		0%	600%	600%
			Bird Dogs, Location Guides			0%	0%
			includes contractors				0%
				SUBTOTAL	0%	600%	600%
				GRAND TOTAL	2400%	4900%	2500%

NEW HAMPSHIRE PUBLIC UTILITIES COMMISSION
DISTRIBUTION CREW REPORT
(In compliance with Puc 308.14)

	EVENT NAME		Winter Storm Quinn				
	DATE REPORT SUBMITTED:		03/09/18	TIME - DATA EXTRACTED:		10:00 AM	
	Submitted by:		Heather Tebbetts				
	Company:		Liberty Utilities				
Quantity of Field Personnel					Prior to Event[A]	During Event	Incremental
			FRONT LINE				
1	**Distribution** 69 KV and Less includes Subtransmission 46kv, 34.5kv,22kv, 13kv, 7.5 kv, 4kv, 2kv and below	Line	Company Line Crews restoring Distribution Circuits		9	9	0
			Affiliate Co Line Crews restoring Distribution Circuits		0	0	0
			Contractor Line Crews restoring Distribution Circuits		2	12	10
			Foreign Utility Line Crews restoring Distribution Circuits		0	0	0
		Service	Company Line Crews restoring Service		0	0	0
			Contractors restoring Service *includes Electricans*		0	0	0
		Pole[B]	Pole Setting/Digging Operations *includes Co, Foreign Uitlity, Contractor*		3	3	0
		Tree	Contractor Tree Clearing - Working on Distribution Circuits		10	21	11
			Foreign Utility Tree Clearing - Working on Distribution Circuits		0	0	0
				SUBTOTAL	24	45	21
			FIELD ASSESSMENT				
2	Distribution *see above*	Line[C]	Company Damage Assessment Personnel		0	2	2
				SUBTOTAL	0	2	2
			PUBLIC SAFETY				
3	Wires Down Appraiser Field Guides Other Support	Line	Company Personnel		0	6	6
			Bird Dogs, Location Guides			0	0
			includes contractors				0
				SUBTOTAL	0	6	6
				GRAND TOTAL	24	53	29

NEW HAMPSHIRE PUBLIC UTILITIES COMMISSION
DISTRIBUTION CREW REPORT
(In compliance with Puc 308.14)

	EVENT NAME		Winter Storm Quinn				
	DATE REPORT SUBMITTED:		03/09/18	TIME - DATA EXTRACTED:		2:00 PM	
	Submitted by:		Heather Tebbetts				
	Company:		Liberty Utilities				
Quantity of Field Personnel					Prior to Event[A]	During Event	Incremental
			FRONT LINE				
1	**Distribution** 69 KV and Less includes Subtransmission 46kv, 34.5kv,22kv, 13kv, 7.5 kv, 4kv, 2kv and below	Line	Company Line Crews restoring Distribution Circuits		9	9	0
			Affiliate Co Line Crews restoring Distribution Circuits		0	0	0
			Contractor Line Crews restoring Distribution Circuits		2	17	15
			Foreign Utility Line Crews restoring Distribution Circuits		0	0	0
		Service	Company Line Crews restoring Service		0	0	0
			Contractors restoring Service *includes Electricans*		0	0	0
		Pole[B]	Pole Setting/Digging Operations *includes Co, Foreign Uitlity, Contractor*		3	3	0
		Tree	Contractor Tree Clearing - Working on Distribution Circuits		10	21	11
			Foreign Utility Tree Clearing - Working on Distribution Circuits		0	0	0
				SUBTOTAL	24	50	26
			FIELD ASSESSMENT				
2	Distribution *see above*	Line[C]	Company Damage Assessment Personnel		0	2	2
				SUBTOTAL	0	2	2
			PUBLIC SAFETY				
3	Wires Down Appraiser Field Guides Other Support	Line	Company Personnel		0	6	6
			Bird Dogs, Location Guides			0	0
			includes contractors				0
				SUBTOTAL	0	6	6
				GRAND TOTAL	24	58	34

NEW HAMPSHIRE PUBLIC UTILITIES COMMISSION
DISTRIBUTION CREW REPORT
(In compliance with Puc 308.14)

	EVENT NAME		Winter Storm Quinn				
	DATE REPORT SUBMITTED:		03/10/18	TIME - DATA EXTRACTED:		10:00 AM	
	Submitted by:		Heather Tebbetts				
	Company:		Liberty Utilities				
Quantity of Field Personnel					Prior to Event[A]	During Event	Incremental
			FRONT LINE				
1	**Distribution** 69 KV and Less includes Subtransmission 46kv, 34.5kv,22kv, 13kv, 7.5 kv, 4kv, 2kv and below	Line	Company Line Crews restoring Distribution Circuits		9	5.5	-3.5
			Affiliate Co Line Crews restoring Distribution Circuits		0	0	0
			Contractor Line Crews restoring Distribution Circuits		2	23	21
			Foreign Utility Line Crews restoring Distribution Circuits		0	0	0
		Service	Company Line Crews restoring Service		0	0	0
			Contractors restoring Service *includes Electricans*		0	0	0
		Pole[B]	Pole Setting/Digging Operations *includes Co, Foreign Uitlity, Contractor*		3	3	0
		Tree	Contractor Tree Clearing - Working on Distribution Circuits		10	21	11
			Foreign Utility Tree Clearing - Working on Distribution Circuits		0	0	0
				SUBTOTAL	24	52.5	28.5
			FIELD ASSESSMENT				
2	Distribution *see above*	Line[C]	Company Damage Assessment Personnel		0	6	6
				SUBTOTAL	0	6	6
			PUBLIC SAFETY				
3	Wires Down Appraiser Field Guides Other Support	Line	Company Personnel		0	6	6
			Bird Dogs, Location Guides			0	0
			includes contractors				0
				SUBTOTAL	0	6	6
				GRAND TOTAL	24	64.5	40.5

NEW HAMPSHIRE PUBLIC UTILITIES COMMISSION
DISTRIBUTION CREW REPORT
(In compliance with Puc 308.14)

	EVENT NAME		Winter Storm Quinn				
	DATE REPORT SUBMITTED:		03/10/18	TIME - DATA EXTRACTED:		6:00 AM	
	Submitted by:		Heather Tebbetts				
	Company:		Liberty Utilities				
Quantity of Field Personnel					Prior to Event[A]	During Event	Incremental
			FRONT LINE				
1	**Distribution** 69 KV and Less includes Subtransmission 46kv, 34.5kv,22kv, 13kv, 7.5 kv, 4kv, 2kv and below	Line	Company Line Crews restoring Distribution Circuits		9	5.5	-3.5
			Affiliate Co Line Crews restoring Distribution Circuits		0	0	0
			Contractor Line Crews restoring Distribution Circuits		2	17	15
			Foreign Utility Line Crews restoring Distribution Circuits		0	0	0
		Service	Company Line Crews restoring Service		0	0	0
			Contractors restoring Service *includes Electricans*		0	0	0
		Pole[B]	Pole Setting/Digging Operations *includes Co, Foreign Uitlity, Contractor*		3	3	0
		Tree	Contractor Tree Clearing - Working on Distribution Circuits		10	21	11
			Foreign Utility Tree Clearing - Working on Distribution Circuits		0	0	0
				SUBTOTAL	24	46.5	22.5
			FIELD ASSESSMENT				
2	Distribution *see above*	Line[C]	Company Damage Assessment Personnel		0	2	2
				SUBTOTAL	0	2	2
			PUBLIC SAFETY				
3	Wires Down Appraiser Field Guides Other Support	Line	Company Personnel		0	6	6
			Bird Dogs, Location Guides			0	0
			includes contractors				0
				SUBTOTAL	0	6	6
				GRAND TOTAL	24	54.5	30.5

NEW HAMPSHIRE PUBLIC UTILITIES COMMISSION
DISTRIBUTION CREW REPORT
(In compliance with Puc 308.14)

	EVENT NAME		Winter Storm Quinn				
	DATE REPORT SUBMITTED:		03/09/18	TIME - DATA EXTRACTED:		6:00 PM	
	Submitted by:		Heather Tebbetts				
	Company:		Liberty Utilities				
Quantity of Field Personnel					Prior to Event[A]	During Event	Incremental
			FRONT LINE				
1	**Distribution** 69 KV and Less includes Subtransmission 46kv, 34.5kv,22kv, 13kv, 7.5 kv, 4kv, 2kv and below	Line	Company Line Crews restoring Distribution Circuits		9	9	0
			Affiliate Co Line Crews restoring Distribution Circuits		0	0	0
			Contractor Line Crews restoring Distribution Circuits		2	17	15
			Foreign Utility Line Crews restoring Distribution Circuits		0	0	0
		Service	Company Line Crews restoring Service		0	0	0
			Contractors restoring Service *includes Electricans*		0	0	0
		Pole[B]	Pole Setting/Digging Operations *includes Co, Foreign Uitlity, Contractor*		3	3	0
		Tree	Contractor Tree Clearing - Working on Distribution Circuits		10	21	11
			Foreign Utility Tree Clearing - Working on Distribution Circuits		0	0	0
				SUBTOTAL	24	50	26
			FIELD ASSESSMENT				
2	Distribution *see above*	Line[C]	Company Damage Assessment Personnel		0	2	2
				SUBTOTAL	0	2	2
			PUBLIC SAFETY				
3	Wires Down Appraiser	Line	Company Personnel		0	6	6
	Field Guides		Bird Dogs, Location Guides			0	0
	Other Support		*includes contractors*				0
				SUBTOTAL	0	6	6
				GRAND TOTAL	24	58	34

NEW HAMPSHIRE PUBLIC UTILITIES COMMISSION
DISTRIBUTION CREW REPORT
(In compliance with Puc 308.14)

	EVENT NAME		Winter Storm Quinn				
	DATE REPORT SUBMITTED:		03/10/18	TIME - DATA EXTRACTED:		2:00 PM	
	Submitted by:		Heather Tebbetts				
	Company:		Liberty Utilities				
Quantity of Field Personnel					Prior to Event[A]	During Event	Incremental
			FRONT LINE				
1	**Distribution** 69 KV and Less includes Subtransmission 46kv, 34.5kv,22kv, 13kv, 7.5 kv, 4kv, 2kv and below	Line	Company Line Crews restoring Distribution Circuits		9	5.5	-3.5
			Affiliate Co Line Crews restoring Distribution Circuits		0	0	0
			Contractor Line Crews restoring Distribution Circuits		2	23	21
			Foreign Utility Line Crews restoring Distribution Circuits		0	0	0
		Service	Company Line Crews restoring Service		0	0	0
			Contractors restoring Service *includes Electricans*		0	0	0
		Pole[B]	Pole Setting/Digging Operations *includes Co, Foreign Uitlity, Contractor*		3	3	0
		Tree	Contractor Tree Clearing - Working on Distribution Circuits		10	21	11
			Foreign Utility Tree Clearing - Working on Distribution Circuits		0	0	0
				SUBTOTAL	24	52.5	28.5
			FIELD ASSESSMENT				
2	Distribution *see above*	Line[C]	Company Damage Assessment Personnel		0	6	6
				SUBTOTAL	0	6	6
			PUBLIC SAFETY				
3	Wires Down Appraiser	Line	Company Personnel		0	6	6
	Field Guides		Bird Dogs, Location Guides			0	0
	Other Support		*includes contractors*				0
				SUBTOTAL	0	6	6
				GRAND TOTAL	24	64.5	40.5

NEW HAMPSHIRE PUBLIC UTILITIES COMMISSION
DISTRIBUTION CREW REPORT
(In compliance with Puc 308.14)

	EVENT NAME		Winter Storm Quinn				
	DATE REPORT SUBMITTED:		03/11/18	TIME - DATA EXTRACTED:		6:00 AM	
	Submitted by:		Heather Tebbetts				
	Company:		Liberty Utilities				
Quantity of Field Personnel					Prior to Event[A]	During Event	Incremental
			FRONT LINE				
1	**Distribution** 69 KV and Less includes Subtransmission 46kv, 34.5kv,22kv, 13kv, 7.5 kv, 4kv, 2kv and below	Line	Company Line Crews restoring Distribution Circuits		9	5.5	-3.5
			Affiliate Co Line Crews restoring Distribution Circuits		0	0	0
			Contractor Line Crews restoring Distribution Circuits		2	23	21
			Foreign Utility Line Crews restoring Distribution Circuits		0	0	0
		Service	Company Line Crews restoring Service		0	0	0
			Contractors restoring Service *includes Electricans*		0	0	0
		Pole[B]	Pole Setting/Digging Operations *includes Co, Foreign Uitlity, Contractor*		3	3	0
		Tree	Contractor Tree Clearing - Working on Distribution Circuits		10	21	11
			Foreign Utility Tree Clearing - Working on Distribution Circuits		0	0	0
				SUBTOTAL	24	52.5	28.5
			FIELD ASSESSMENT				
2	Distribution *see above*	Line[C]	Company Damage Assessment Personnel		0	6	6
				SUBTOTAL	0	6	6
			PUBLIC SAFETY				
3	Wires Down Appraiser	Line	Company Personnel		0	6	6
	Field Guides		Bird Dogs, Location Guides			0	0
	Other Support		*includes contractors*				0
				SUBTOTAL	0	6	6
				GRAND TOTAL	24	64.5	40.5

NEW HAMPSHIRE PUBLIC UTILITIES COMMISSION
DISTRIBUTION CREW REPORT
(In compliance with Puc 308.14)

	EVENT NAME		Winter Storm Quinn				
	DATE REPORT SUBMITTED:		03/10/18	TIME - DATA EXTRACTED:		6:00 PM	
	Submitted by:		Heather Tebbetts				
	Company:		Liberty Utilities				
Quantity of Field Personnel					Prior to Event[A]	During Event	Incremental
			FRONT LINE				
1	**Distribution** 69 KV and Less includes Subtransmission 46kv, 34.5kv,22kv, 13kv, 7.5 kv, 4kv, 2kv and below	Line	Company Line Crews restoring Distribution Circuits		9	5.5	-3.5
			Affiliate Co Line Crews restoring Distribution Circuits		0	0	0
			Contractor Line Crews restoring Distribution Circuits		2	23	21
			Foreign Utility Line Crews restoring Distribution Circuits		0	0	0
		Service	Company Line Crews restoring Service		0	0	0
			Contractors restoring Service *includes Electricans*		0	0	0
		Pole[B]	Pole Setting/Digging Operations *includes Co, Foreign Uitlity, Contractor*		3	3	0
		Tree	Contractor Tree Clearing - Working on Distribution Circuits		10	21	11
			Foreign Utility Tree Clearing - Working on Distribution Circuits		0	0	0
				SUBTOTAL	24	52.5	28.5
			FIELD ASSESSMENT				
2	Distribution *see above*	Line[C]	Company Damage Assessment Personnel		0	6	6
				SUBTOTAL	0	6	6
			PUBLIC SAFETY				
3	Wires Down Appraiser	Line	Company Personnel		0	6	6
	Field Guides		Bird Dogs, Location Guides			0	0
	Other Support		*includes contractors*				0
				SUBTOTAL	0	6	6
				GRAND TOTAL	24	64.5	40.5

NEW HAMPSHIRE PUBLIC UTILITIES COMMISSION
DISTRIBUTION CREW REPORT
(In compliance with Puc 308.14)

	EVENT NAME		Winter Storm Quinn				
	DATE REPORT SUBMITTED:		03/11/18	TIME - DATA EXTRACTED:		10:00 AM	
	Submitted by:		Heather Tebbetts				
	Company:		Liberty Utilities				
Quantity of Field Personnel					Prior to Event[A]	During Event	Incremental
			FRONT LINE				
1	**Distribution** 69 KV and Less includes Subtransmission 46kv, 34.5kv,22kv, 13kv, 7.5 kv, 4kv, 2kv and below	Line	Company Line Crews restoring Distribution Circuits		9	5.5	-3.5
			Affiliate Co Line Crews restoring Distribution Circuits		0	0	0
			Contractor Line Crews restoring Distribution Circuits		2	23	21
			Foreign Utility Line Crews restoring Distribution Circuits		0	0	0
		Service	Company Line Crews restoring Service		0	0	0
			Contractors restoring Service *includes Electricans*		0	0	0
		Pole[B]	Pole Setting/Digging Operations *includes Co, Foreign Uitlity, Contractor*		3	3	0
		Tree	Contractor Tree Clearing - Working on Distribution Circuits		10	21	11
			Foreign Utility Tree Clearing - Working on Distribution Circuits		0	0	0
				SUBTOTAL	24	52.5	28.5
			FIELD ASSESSMENT				
2	Distribution *see above*	Line[C]	Company Damage Assessment Personnel		0	4	4
				SUBTOTAL	0	4	4
			PUBLIC SAFETY				
3	Wires Down Appraiser	Line	Company Personnel		0	7	7
	Field Guides		Bird Dogs, Location Guides			0	0
	Other Support		*includes contractors*				0
				SUBTOTAL	0	7	7
				GRAND TOTAL	24	63.5	39.5

THIS PAGE INTENTIONALLY LEFT BLANK

Appendix *E*

Storm Call Documents

Liberty Utilities

Meeting Agenda – Prior to Event

Event Name: **Meeting Number:**
Meeting Date: **Meeting Time:**
Meeting Host: Form Revised on March 5, 2018

President	Susan Fleck			
Vice-President	Craig Jennings			
Assignments – Incident Command System	**Primary**	**Attend**	**Secondary**	**Attend**
1. Incident Commander	Anthony Strabone		Mark Parker	
2a.Regional Commander-Salem	Ryan Tsantoulis			
2b.Regional Commander-Lebanon	Travis Singer			
3. Resource Officer	Heather Tebbetts		Steve Hall	
4. Logistics Officer	Rich Foley		Phyllis Chopelas	
5. Financial Officer	Tisha Sanderson		Cynthia Trottier	
6. Human Resource Officer	Lori Oliveira		John Sanabria	
7. Liaison Officer	Michael Licata		Huck Montgomery	
8. Information Officer	John Shore			
9. System Control Center	Norm Gallagher		Kathy Kelley	
10 Customer Call Center	Christine Downing		Nicole Harris	
11.Data Collection Officer	Leo Cody			
12.Gas Operations	Rich MacDonald		Bob Mostone	
13.IT Coordinator	Don Romano		David Chung	
14.Safety & Health Officer	Kevin Spottiswood		Rich Paradie	
15.Environment Officer	Mary Casey		Rich Paradie	
16.Security/Facilities Officer	Doug Dorn		Shawn Raleigh	
Assignments - System Wide				
18.Municipal Room Coordinator	Jill Fitzpatrick		Lisa DeGregory	
19.Wires Down Office Support	Jennifer Figueroa		Tedd Cluff	
20.Wires Down Field Assessor	Kevin Hollins		Chuck Jones	
21.Damage Assessment	David Lepie		Chuck Rodrigues	
22.Tree Crew/Forestry Coordinator	Jeff Carney			
23.OnBoarding Contractors	Rich Paradie		Ken Salter	
24.Field Guide Mutual Aid Contractors	Bob Johnson		Ken Salter	
25.Service Restoration Coordinator	Joel Rivera			
26.Substations	Mario Barone			
Assignments - Salem				
17.Electric Operations Supervisor	Ryan Tsantoulis			
On-Call Supervisor				
Assignments - Lebanon				
17.Electric Operations Supervisor	Travis Singer			
On-Call Supervisor				
Assignments - Miscellaneous				
Customer Service	Mercedes Grenier		Kristen Lange	
Electric Control	Emily Backels			
Emergency Management	Mark Eagan			
Engineering	Chuck Rodrigues			
Procurement	Dana Rogers			
Training	Ken Salter			

SAFETY MESSAGE

WEATHER

A. Current Weather Report

A. Source:
B. Time:
C. Description:

B. Current Weather Scenarios

A. Best Case:
B. Worse Case:
C. Most Likely Case:

C. Energy Event Index Forecast

A. Event Level:
B. Confidence Level:

Energy Event Index Definition

No Leaves (Nov 1 - Mar 31)

EEI	Wind Speed	Wind/Gust	Snow	Ice
1	< 40 mph	< 45 mph	< 6 in.	< 1/10 in.
2	>= 40 mph	>= 45 mph	>= 6 in.	>= 1/10 in.
3	>= 50 mph	>= 55 mph	>= 8 in.	>= 3/8 in.
4	>= 60 mph	>= 70 mph	>= 12 in.	>= 1/2 in.
5	>= 70 mph	>= 85 mph	>= 24 in.	>= 1 in.

Confidence Level	
Low	<30% chance the most likely EEI level remains at that level through the event
Medium	30-60% chance the most likely EEI level remains at that level through the event
High	>=60% chance the most likely EEI level remains at that level through the event

*Note: Confidence is NOT a measure of probability of an event occurring; That information can be found in the text product. Confidence is a measure of how likely the forecast EEI level will stay at that level from now through the event, or a way to measure the potential for variability in the forecast. So for example, if it is Monday and there are EEI-2 gusts forecast on Wednesday with high confidence it means the following: There is a >=60% chance the most likely forecasted gusts will remain EEI-2 with all updates from now through Wednesday.

Action Items:

SITUATION ASSESSMENT

1. **Has the Director of Electric Operations declared that the Company is in Storm Preparation mode?**
   Yes ☐ No ☐
   A. Date:
   B. Time:

2. **Expected Event Type As Of Meeting Time**
   (Note: See Attachment 1)
   A. Best Case: Choose an item.
      Customers Impacted -
   B. Worse Case: Choose an item.
      Customers Impacted -
   C. Most Likely Case: Choose an item.
      Customers Impacted –

3. **Expected Event Impact As Of Meeting Time**
   A. Impact Date: Click here to enter a date.
   B. Impact Time:
   C. Impact Duration:
   D. Impact Location
   E. Impact Description:

4. **Will the Event occur during a Holiday or over a Weekend?**

5. **Does the NHPUC Safety Division anticipate a Wide-Scale Emergency?**
   Has the NHPUC notified Liberty Utilities?

   Has the NHPUC named the Event per Puc 307.08 (c)?

   (Note: Puc 302:24 defines "Wide-Scale Emergency" as an event that is an event which results in, or is or expected to result in:
   (a) a sustained interruption of electric service to 10% or more of Liberty Utilities customers and restoration of electric service to any of these customers takes more than 24 hours; or
   (b) the federal, state or local government declaring an official state of emergency in Liberty Utilities service territory and the emergency involves an interruption of electric service.)

6. **Are there any Abnormal Conditions currently on the Electric Distribution System that need to be addressed before the Event?**

Action Items:

RESOURCE REQUIREMENTS

Notes: A crew generally consists of two people (2 FTEs) with a truck and equipment.
Line Crews: Responsible for switching and repair of equipment and hardware and the final energizing of the line.
Digger Crews: Responsible for replacing utility poles.
Tree Crews: Responsible for removing and relocation of downed trees and limbs to eliminate safety hazards.
On Property Crews: Outside contractor crews currently working in state for Liberty Utilities at the time of the event.
Foreign Crews / Mutual Aid Crews: Outside company or contractor crews requested by LU through NAMAG.

1. Expected Company Resources Required to Restore Electric Service As Of Meeting Time
(Liberty Utilities Blue Sky staffing level is 13 crews.)

	Lebanon	Salem	Charlestown	Londonderry	Total
LU Line Crews					
On Property Line Crews					
Additional Contractor Line Crews					
LU Tree Crews					
Troubleshooters					
On Property Tree Crews					
Additional Contractor Tree Crews					
On Property Digger Crews					
Additional Contractor Digger Crews					
Additional Electric Controllers					
Additional Electric Dispatchers					
Additional Customer Service Representatives					

Has the Company canceled vacation for employees?
Has the Company notified employees to be on standby?
Has the LIBERTY UTILITIES – ELECTRIC OPERATIONS ON-CALL SCHEDULE been issued?

2. Expected Foreign / Mutual Aid Resources Required to Restore Electric Service As Of Meeting Time

	Lebanon	Salem	Charlestown	Total
Foreign Line Crews				
Foreign Tree Crews				
Foreign Digger Crews				

3. North Atlantic Mutual Assistance Group (NAMAG)
Has Liberty Utilities initiated a Joint Mobilization Conference Call through NAMAG? _____
Has another operator initiated a Joint Mobilization Conference Call through NAMAG? _____
What is the Liberty Utilities status at the time of the meeting?
Holding _____ Who made the decision? _____
Requesting _____ Who made the decision? _____
Offering _____ Who made the decision? _____

Has Liberty Utilities requested assistance from neighboring utilities? _____
(See NAMAG exception to Rules of Engagement if a single impact for a short duration.)

4. Expected Outside Contractors Required to Perform Other Services As Of Meeting Time
Service: Snowplow
Contractor:
Contact:

Service:

Service: Food
Contractor:
Contact:

Service:

Action Items:

PRE-STAGING of CREWS, PERSONNEL and MATERIALS

Has the Company considered the need to pre-stage crews?
Who made the decision? When?

Date Pre-Staging is expected? Time?

	LU Contact	Lebanon	Salem	Charlestown
Crews				
Location				
Onboarding				
Field Guides				
Stand-By Personnel				
Tools, Equipment, Materials				
Security				
Meals				
Lodging				
Municipal Room				
Regional EOC				
Damage Assessment				

Action Items:

COMMUNICATIONS – Action Items

A. To Company Employees:
- Operations (Example: Use radio instead of cell phone.)

- Non Operations

B. To Governor / State Government / NH WebEOC:

C. To NHPUC Safety Division:

D. To Cities / Towns:
Are there any Storm Conference Calls scheduled:

E. To Customers / Critical Care Customers:

F. To Public:

G. To NAMAG & Other Industry Groups:

H. Other Pole Attachees:

REPORTS – Action Items

A. Prepare internal Storm Planning Report.

B. File Puc Form E-33 prior to the onset of any anticipated Wide-Scale Emergency.

C. Continue to prepare and file all other required reports.

ADMINISTRATION

A. Send all storm related information and documentation to "SM NH Storm Duty".
B. See CQ&EM folder on Liberty Utilities East site for Emergency Management Forms and Reports.
C. Planning and Preparation Activities Recoverable (if EEI Level 3 or greater with a High probability)
D. Storm/Event Accounting:

Description	GP Expense Job	GP Capital Job	GP VM Job
Storm Event EII Level			

Storm Contingency Fund (CFID 1748)

The Settlement in Docket No. DG 06-107, Exhibit GSE-7, approved by Order No. 24,777, calls for Granite State to establish a storm contingency fund. The fund would be used to pay for all of the operations and maintenance costs incurred by Granite State as the result of major storms. A major storm is defined as a severe weather event or events causing 30 concurrent troubles (i.e., interruption events occurring on either primary or secondary lines) and 15 percent of customers interrupted or 45 concurrent troubles.

The Settlement in Docket No. DE 13-063, approved in Order No. 25,738, entitles Liberty Utilities to recover certain costs if the weather forecast shows an EII Level of 3 or greater with a high probability of occurrence. The costs include pre-staging of crews, standby arrangements with external contractors, incremental compensation of employees, and other costs that may be incurred to prepare for a qualifying major storm.

INCIDENT COMMAND SYSTEM POSITIONS – Comments / Questions

1. Incident Commander:

2. On-Scene Commander / Regional Commander:

3. Resource Officer:

4. Logistics Officer:

5. Financial Officer:

6. Human Resources Officer:

7. Liaison Officer:

8. Information Officer:

9. System Control Center:

10. Customer Call Center:

11. Data Collection Officer:

12. Gas Operations:

13. IT Coordinator:

14. Safety & Health Officer:

15. Environment Officer:

16. Security/Facilities Officer:

Others:

NEXT MEETING

A. Date:
B. Time:
C. Location:
D. Liberty Storm Conference Call Number: **1-888-875-1833**
   Guest Passcode: **430980**
   Host Passcode: **4309805**

ATTACHMENT 1

The following are guidelines to determine the severity of Emergencies and their Operating Conditions for the Company.
The guidelines are intended to be consistent with Table 306-1 in NH Puc 306.09:

Emergency Response Standards and Electrical Outage Restoration

Type 5 **Small Impact Event** *(Localized Response Condition / Normal Operations)* - System activity is normal with response coordinated with local on-call personnel. Incident Command Structure not activated.
(0 - 840 customers)

Type 4 **Moderate Impact Event** *(Heightened Alert)* - The severity within a Region(s) is (are) such that restoration activities are generally accomplished within a 24 hour period. This may require assistance from another Region or contractors. Incident Command Structure may be activated at the Region level.
(840 - 2100 customers)

Type 3 **Serious Impact Event** *(Enhanced Support)* - The severity within a Region(s) is (are) such that restoration activities are generally accomplished with assistance from other Regions and contractors within 24 to 48 hour period. Incident Command structure activated at the Regional level.
(2100 - 4200 customers)

Type 2 **Major Impact Event** *(Comprehensive Support)* – The severity within the Region (s) is (are) such that restoration activities are generally accomplished with assistance from other Regions and contractors within a 48 to 144 hour period. This may require mutual assistance from other utilities. Incident Command Structure activated at the Regional level and may be activated at the System level.
(4200 - 8400 customers)

Type 1 **Catastrophic Impact Event** *(Emergency Support)* – The severity within a Region(s) is (are) such that restoration activities are accomplished with assistance from other Regions, contactors and require mutual assistance from other utilities. Restoration activities will generally require 48 to 240 hour period. The Incident Command Structure will be activated at the Regional and System levels.
(>8400 customers)

Puc 306.09 (g): Each ERP shall incorporate projected event levels consistent with Table 306-1.

Table 306-1

Utility	ERP Event Level	% Customers Out	Outage Duration (Hrs.)
	5	≤2	<12
	4	>2≤5	0-24
	3	>5 ≤10	24-48
	2	>10≤20	48-144
	1	>20	48-240

Electric Operations Emergency Response Assignments

Assignments in Red are Primary
S Secondary
B Backup

Prepared By: Leo Cody

As of: March 5 2018

Emergency Position	Name	Available Training	Comments
President	Susan Fleck		
Vice-President Operations & Engineering	Craig Jennings		
1. System Incident Commander	**Anthony Strabone**	ICS Checklist	
	Mark Parker		
2. Regional Commander	**Ryan Tsantoulis - Salem**	ICS Checklist	
	Travis Singer - Lebanon		
3. Resource Officer	**Heather Tebbetts**	ICS Checklist	NHWebEOC Access
	Steve Mullen - S		
4. Logistics Officer	**Rich Foley**	ICS Checklist	
	Phyllis Chopelas - S		
	Dana Rogers - B		
	Brenda Pelletier - B		
	Karen Sinville - B		
5. Finance Officer	**Tisha Sanderson**	ICS Checklist	
	Cynthia Trottier - S		
6. Human Resources Officer	**Lori Oliveira**	ICS Checklist	
	John Sanabria - S		
7. Liaison Officer	**Michael Licata**	ICS Checklist	NHWebEOC Access
	Huck Montgomery - S		
8. Information Officer	**John Shore**	ICS Checklist	
	Dina Sylvester - S		
9. System Control Center	**Norm Gallagher**		
	Kathy Kelley - S		
	Emily Backels - B		
10. Customer Call Center	**Christine Downing**		
(Customer Service)	Nicole Harris - S		
	Kristen Lange - B		
	Mercedes Grenier - B		
	Laura Sasso - B		
	Joanne Iovino - B		
11. Data Collection Officer	**Leo Cody**		NHWebEOC Access

Electric Operations Emergency Response Assignments

Assignments in Red are Primary
S Secondary
B Backup

Prepared By: Leo Cody

As of: March 5 2018

Emergency Position	Name	Available Training	Comments
12. Gas Operations	**Rich MacDonald**		
	Robert Mostone - S		
13. IT Coordinator	**Don Romano**		
	David Chung - S		
14. Safety / Health Officer	**Kevin Spottiswood**	ICS Checklist	
	Rich Paradie - S		
15. Environmental Officer	**Mary Casey**	ICS Checklist	
	Rich Paradie - S		
16. Security / Facilities Officer	**Doug Dorn**	ICS Checklist	
	Shawn Raleigh - S		
17. Electric Operations Supervisor	**Ryan Tsantoulis - Salem**		
	Travis Singer - Lebanon		
	Mario Barone - S		
	Ken Salter - B		
18. Municipal Room Coordinator	**Jill Fitzpatrick**		NHWebEOC Access
	Lisa DeGregory - S		
	Tracy Musto - B		
	Jessica Kelly - B		
	Nichole Kallini - B		
	Dennis Gray - B		
	Rob Reals - B		
	Alice Renault - B		
	Eric Stanley - B		
Service Inspector Coordinator	**Melissa Samenfeld**		
(Located in Municipal Room)	**Jessica Louden**		
	Christopher Bouchard		
19. Wires Down - Office Support	**Jennifer Figueroa**	Responder	
	Tedd Cluff		
	Stacy Christopher - S		
	Judith Coulombe - B		
	Jesse Wooster - B		
	Mark Summerfield - B		
	Sarah Finnegan - B		

Electric Operations Emergency Response Assignments	**Assignments in Red are Primary** **S Secondary** **B Backup**		
Prepared By: Leo Cody		As of: March 5 2018	
Emergency Position	**Name**	**Available Training**	**Comments**
Wires Down - Wire Guarding	**Bob Mostone**	Training Dept.	
	Alain Tinker - S		
	Gas Operations Personnel		
20. Wires Down Field Assessor Coordinator	**Kevin Hollins**		
	Chuck Jones		
	Deb Reilly - B		
	Dave Saffie - B		
	Marylou Avery - B		
	Amy Lyons - B		
	Mike Moody - B		
	Josh Ortiz - B		
	Steve Carney - B		
	AJ Furtado - B		
21. Damage Assessment	**David Lepie**		
	Chuck Rodrigues - S		
	Andrew Mills - B		
	Brad Marx - B		
	Ryan Burns - B		
	Dave Saal - B		
	Peter Chivers - B		
	Thomas Todd - B		
	Brian Frost - B		
	Matthew Minghella - B		
Drivers:	Jim Riordan		
	Steve Hall		
	Marty DeBruin		
	Ryan Lagasse		
22. Tree Crew / Forestry Coordinator	**Jeff Carney**		
(Vegetation Management)	Leonard Jenkins-Consultant		
	Heather Green-Consultant		
	Ed Wollschlager-Consultant		
23. OnBoarding Contractors	**Rich Paradie**	Handout	
	Ken Salter - S		
	Mario Barone - B		
	Kevin Spottiswood - B		
	Jeff Carney - B		
24. Field Guide Mutual Aid Contractors	**Bob Johnson**		
	Ken Salter - S		

Electric Operations Emergency Response Assignments	**Assignments in Red are Primary** **S Secondary** **B Backup**		
Prepared By: Leo Cody		As of: March 5 2018	
Emergency Position	**Name**	**Available Training**	**Comments**
	Retirees		
25. Service Restoration / Outage Coordinator (Storm Room)	**Joel Rivera**	Responder	
	Anthony Strabone - S		
	Mel Emerson - B		
	Rick Huntley - B		
26. Substations	**Mario Barone**		

Notes:

1. *ICS Checklist:* Incident Command System Checklist is available on the CQ&EM site.

2. *Training Dept.:* Slides prepared by the Training Dept. are available on the CQ&EM site. They include:
   - "Electrical Hazard Awareness"
   - "Orientation for Wires Down"
   - "Orientation for Damage Assessment Personnel"
   - "Field Guide for Mutual Aid Crews"
   - "Storm Assignment Preparation"
   - "Electric Operations Fundamentals"
   - "Gas Operations Fundamentals"

3. *Responder:* See the "Job Aid for Responder" on the CQ&EM site.

4. *NHWebEOC Access:* Indicates that the individual has completed NH WebEOC training.

5. *Primary:* *May also indicate Day Shift.*

6. *Secondary / Backup:* *May also indicate Night Shift.*

ELECTRIC EVENT ORGANIZATION

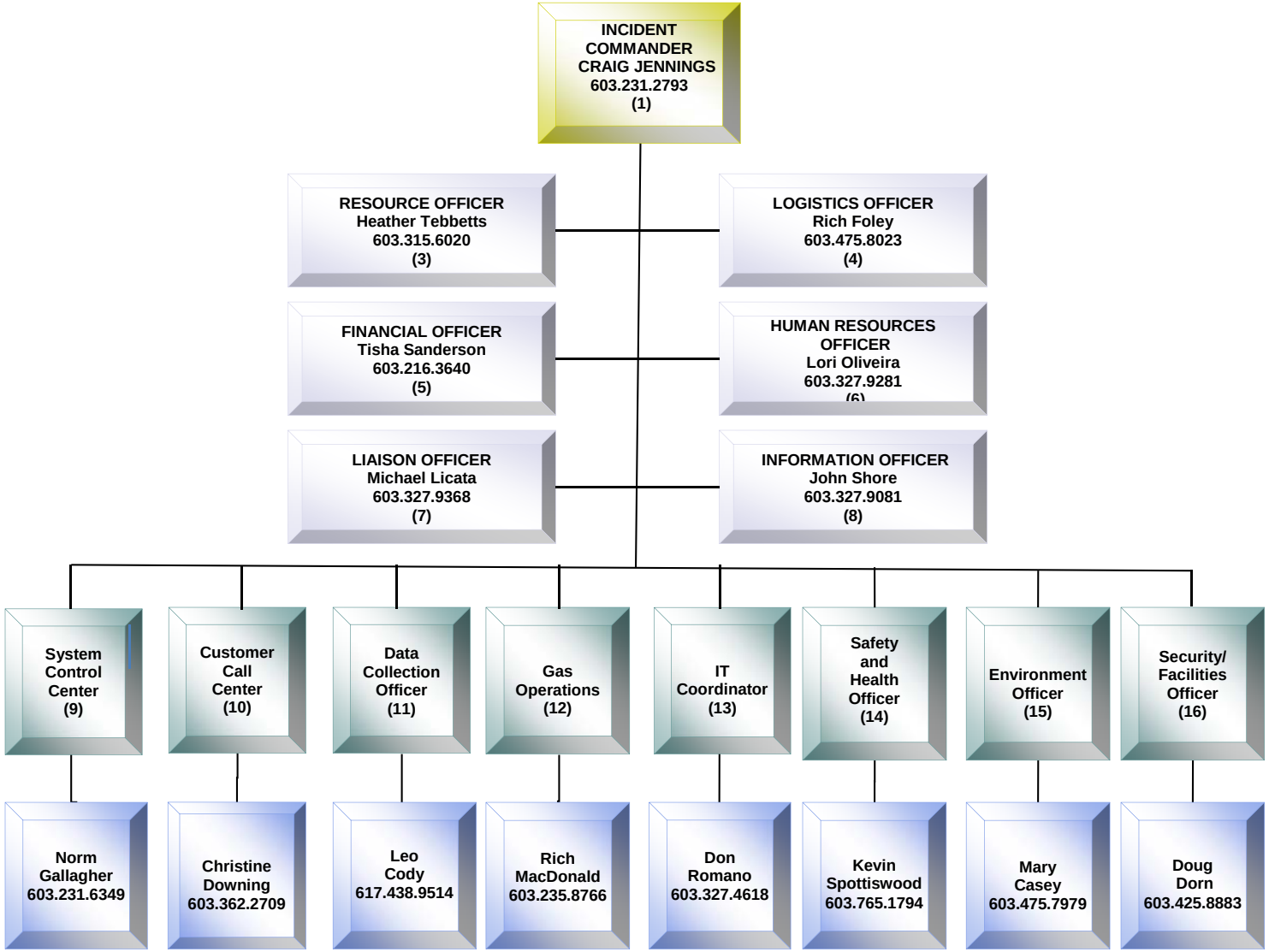

Prepared By: Leo Cody

As of: March 5, 2018

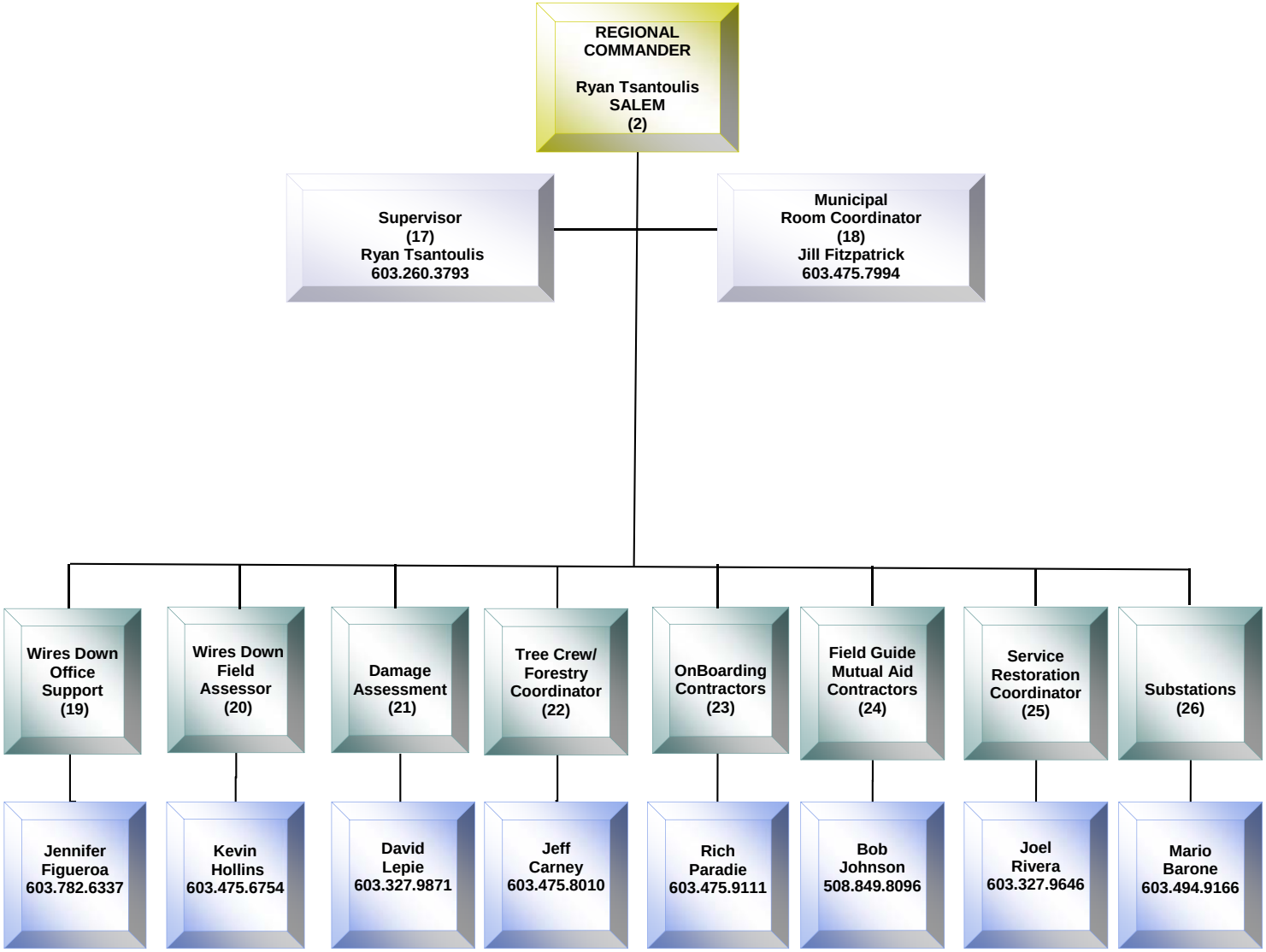
REGIONAL COMMANDER
Ryan Tsantoulis
SALEM
(2)
Supervisor
(17)
Ryan Tsantoulis
603.260.3793
Municipal
Room Coordinator
(18)
Jill Fitzpatrick
603.475.7994
Wires Down Office Support (19)
Wires Down Field Assessor (20)
Damage Assessment (21)
Tree Crew/ Forestry Coordinator (22)
OnBoarding Contractors (23)
Field Guide Mutual Aid Contractors (24)
Service Restoration Coordinator (25)
Substations (26)
Jennifer Figueroa
603.782.6337
Kevin Hollins
603.475.6754
David Lepie
603.327.9871
Jeff Carney
603.475.8010
Rich Paradie
603.475.9111
Bob Johnson
508.849.8096
Joel Rivera
603.327.9646
Mario Barone
603.494.9166

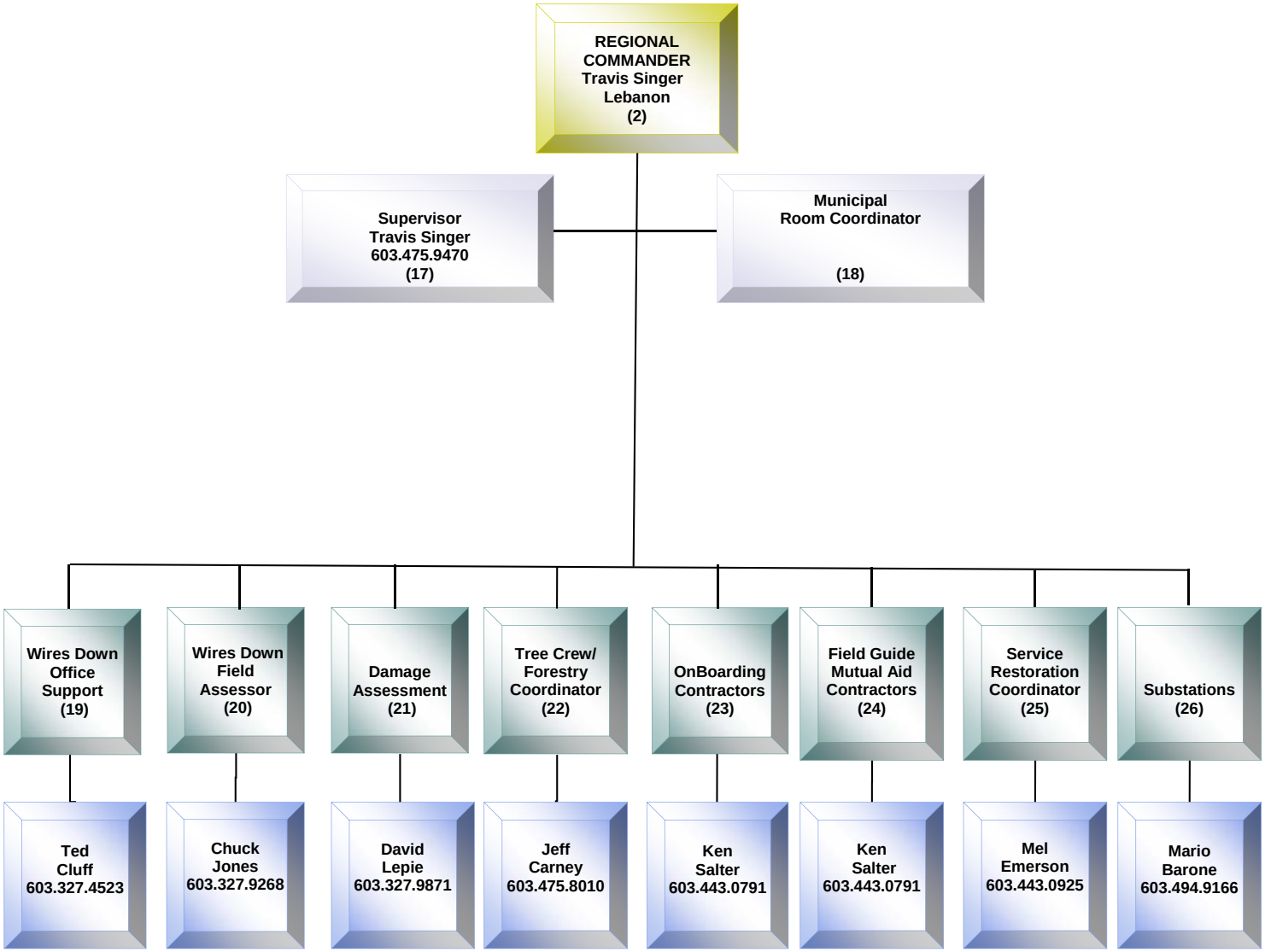
REGIONAL COMMANDER Travis Singer Lebanon (2)
Supervisor Travis Singer 603.475.9470 (17)
Municipal Room Coordinator (18)
Wires Down Office Support (19)
Wires Down Field Assessor (20)
Damage Assessment (21)
Tree Crew/ Forestry Coordinator (22)
OnBoarding Contractors (23)
Field Guide Mutual Aid Contractors (24)
Service Restoration Coordinator (25)
Substations (26)
Ted Cluff 603.327.4523
Chuck Jones 603.327.9268
David Lepie 603.327.9871
Jeff Carney 603.475.8010
Ken Salter 603.443.0791
Ken Salter 603.443.0791
Mel Emerson 603.443.0925
Mario Barone 603.494.9166

Liberty Utilities

Meeting Agenda – During Event

Event Name: **Meeting Number:**
Meeting Date: **Meeting Time:**
Meeting Host: Form Revised on March 6, 2018

President	Susan Fleck			
Vice-President	Craig Jennings			
Assignments – Incident Command System	**Primary**	**Attend**	**Secondary**	**Attend**
1. Incident Commander	Anthony Strabone		Mark Parker	
2a.Regional Commander-Salem	Ryan Tsantoulis			
2b.Regional Commander-Lebanon	Travis Singer			
3. Resource Officer	Heather Tebbetts		Steve Hall	
4. Logistics Officer	Rich Foley		Phyllis Chopelas	
5. Financial Officer	Tisha Sanderson		Cynthia Trottier	
6. Human Resource Officer	Lori Oliveira		John Sanabria	
7. Liaison Officer	Michael Licata		Huck Montgomery	
8. Information Officer	John Shore			
9. System Control Center	Norm Gallagher		Kathy Kelley	
10 Customer Call Center	Christine Downing		Nicole Harris	
11.Data Collection Officer	Leo Cody			
12.Gas Operations	Rich MacDonald		Bob Mostone	
13.IT Coordinator	Don Romano		David Chung	
14.Safety & Health Officer	Kevin Spottiswood		Rich Paradie	
15.Environment Officer	Mary Casey		Rich Paradie	
16.Security/Facilities Officer	Doug Dorn		Shawn Raleigh	
Assignments - System Wide				
18.Municipal Room Coordinator	Jill Fitzpatrick		Lisa DeGregory	
19.Wires Down Office Support	Jennifer Figueroa		Tedd Cluff	
20.Wires Down Field Assessor	Kevin Hollins		Chuck Jones	
21.Damage Assessment	David Lepie		Chuck Rodrigues	
22.Tree Crew/Forestry Coordinator	Jeff Carney			
23.OnBoarding Contractors	Rich Paradie		Ken Salter	
24.Field Guide Mutual Aid Contractors	Bob Johnson		Ken Salter	
25.Service Restoration Coordinator	Joel Rivera			
26.Substations	Mario Barone			
Assignments - Salem				
17.Electric Operations Supervisor	Ryan Tsantoulis			
On-Call Supervisor				
Assignments - Lebanon				
17.Electric Operations Supervisor	Travis Singer			
On-Call Supervisor				
Assignments - Miscellaneous				
Customer Service	Mercedes Grenier		Kristen Lange	
Electric Control	Emily Backels			
Emergency Management	Mark Eagan			
Engineering	Chuck Rodrigues		Bob Johnson	
Procurement	Dana Rogers			
Training	Ken Salter			
Communications	Emily Paquette			

SAFETY QUESTIONS

1. Is the Public Safe?

2. Are the Employees Safe and All Accounted For?

3. Are the Employees' Family Members Safe?

WEATHER

A. <u>Current Weather Report</u>

A. Source:
B. Time:
C. Description:

B. <u>Current Weather Scenarios</u>

A. Best Case:
B. Worse Case:
C. Most Likely Case:

C. <u>Energy Event Index Forecast</u>

A. Event Level:
B. Confidence Level:

Energy Event Index Definition

No Leaves (Nov 1 - Mar 31)

EEI	Wind Speed	Wind/Gust	Snow	Ice
1	< 40 mph	< 45 mph	< 6 in.	< 1/10 in.
2	>= 40 mph	>= 45 mph	>= 6 in.	>= 1/10 in.
3	>= 50 mph	>= 55 mph	>= 8 in.	>= 3/8 in.
4	>= 60 mph	>= 70 mph	>= 12 in.	>= 1/2 in.
5	>= 70 mph	>= 85 mph	>= 24 in.	>= 1 in.

Confidence Level	
Low	<30% chance the most likely EEI level remains at that level through the event
Medium	30-60% chance the most likely EEI level remains at that level through the event
High	>=60% chance the most likely EEI level remains at that level through the event

*Note: Confidence is NOT a measure of probability of an event occurring; That information can be found in the text product. Confidence is a measure of how likely the forecast EEI level will stay at that level from now through the event, or a way to measure the potential for variability in the forecast. So for example, if it is Monday and there are EEI-2 gusts forecast on Wednesday with high confidence it means the following: There is a >=60% chance the most likely forecasted gusts will remain EEI-2 with all updates from now through Wednesday.

Action Items:

SITUATION ASSESMENT

1. **Has the Incident Commander mobilized the Company resources?**
   Yes ☐ No ☐
   A. Date:
   B. Time:

2. **Event Impact As Of Meeting Time**
   A. Impact Location
   B. Impact Description:

3. **Event Type As Of Meeting Time**
   A. Best Case: Choose an item.
      Customers Impacted -
   B. Worse Case: Choose an item.
      Customers Impacted -
   C. Most Likely Case: Choose an item.
      Customers Impacted –

4. **Has the Governor declared a State of Emergency?**

5. **Has the State opened its Emergency Operations Center?**

6. **Has the NHPUC Safety Division declared a Wide-Scale Emergency?**

7. **Are there any known road closures on the NH WebEOC?**

8. **Damage Assessment Summary As Of Meeting Time**

	Lebanon	Salem	Charlestown
Time of First Outage			
Peak Number of Customers Affected			
Peak Percent of Customers Affected			
Number of Circuits Locked Out			
Number of Feeders Affected			
Number of Substations Affected			
Number of Services To Be Replaced			
Footage of Wire To Be Reattached/Replaced			

RESOURCE DEPLOYMENT

Notes: A crew generally consists of two people (2 FTEs) with a truck and equipment.
Line Crews: Responsible for switching and repair of equipment and hardware and the final energizing of the line.
Digger Crews: Responsible for replacing utility poles.
Tree Crews: Responsible for removing and relocation of downed trees and limbs to eliminate safety hazards.
On Property Crews: Outside contractor crews currently working in state for Liberty Utilities at the time of the event.
Foreign Crews / Mutual Aid Crews: Outside company or contractor crews requested by LU through NAMAG.

1. Company Resources Required to Restore Electric Service As Of Meeting Time
(Liberty Utilities Blue Sky staffing level is 13 crews.)

	Lebanon	Salem	Charlestown	Londonderry	Total
LU Line Crews					
On Property Line Crews					
Additional Contractor Line Crews					
LU Tree Crews					
Troubleshooters					
On Property Tree Crews					
Additional Contractor Tree Crews					
On Property Digger Crews					
Additional Contractor Digger Crews					
Additional Electric Controllers					
Additional Electric Dispatchers					
Additional Customer Service Representatives					

Has the Company canceled vacation for employees?
Has the Company notified employees to be on standby?

2. Foreign / Mutual Aid Resources In State to Restore Electric Service As Of Meeting Time

	Lebanon	Salem	Charlestown	Total
Foreign Line Crews				
Foreign Tree Crews				
Foreign Digger Crews				

3. Additional Foreign / Mutual Aid Resources Needed to Restore Electric Service As Of Meeting Time

	Lebanon	Salem	Charlestown	Total
Foreign Line Crews				
Foreign Tree Crews				
Foreign Digger Crews				

4. North Atlantic Mutual Assistance Group (NAMAG)

Has Liberty Utilities initiated a Joint Mobilization Conference Call through NAMAG? _____
Has another operator initiated a Joint Mobilization Conference Call through NAMAG? _____
What is the Liberty Utilities status at the time of the meeting?
Holding _____ Who made the decision? _____
Requesting _____
Offering _____

Has Liberty Utilities requested assistance from neighboring utilities? _____
(See NAMAG exception to Rules of Engagement if a single impact for a short duration.)

5. Damage Assessment Resources Needed to Restore Electric Service As Of Meeting Time

	Lebanon	Salem	Charlestown	Total
Wires Down Office Support				
Wires Down Field Assessor				
Wires Down Standby				
Damage Assessment				

6. Is there a need to utilize local fire and police for Damage Assessment?

7. Outside Contractors Performing Other Services As Of Meeting Time

Service: Snowplow
Contractor:
Contacted By:

Service: Food
Contractor:
Contacted By:

Action Items:

ESTIMATED TIME OF 90% RESTORATION (See Appendix I of the Emergency Plan)

	Lebanon	Salem	Charlestown
1. Live Wires / Extreme Hazards			
2. Transmission			
3. Substations			
4. Critical Facilities			
5. Life Support Customers			
6. Primary Circuits			
7. Secondary Circuits			
8. Final Circuit Sweep			
9. Permanent Repairs			

Action Items:

STAGING of CREWS, PERSONNEL and MATERIALS

Are all Foreign Crews in place?

Are additional Foreign Crews expected?

When?

	LU Contact	Lebanon	Salem	Charlestown
Crews				
Location				
Onboarding				
Field Guides				
Stand-By Personnel				
Tools, Equipment, Materials				

Security				
Meals				
Lodging				
Municipal Room				
Regional EOC				
Damage Assessment				

Action Items:

COMMUNICATIONS – Updates

A. To Company Employees:

B. To Governor / State Government / NH WebEOC:

C. To NHPUC Safety Division:

D. To Cities / Towns Storm Conference Call:

E. To Customers / Critical Care Customers:

F. To Public:

G. To NAMAG & Other Industry Groups:

H. To Other Pole Attachees:

REPORTS – Action Items

A. Prepare internal Storm Planning Report.
B. Prepare internal Customer Outage Reports.
C. File Puc Forms E-33 and E-36A if a wide scale emergency.
D. Continue to prepare and file all other required reports.

ADMINISTRATION

A. Send all storm related information and documentation to “SM NH Storm Duty”.
B. See CQ&EM folder on Liberty Utilities East site for Emergency Management Forms and Reports.
C. Is this a Qualifying Storm Event?
D. Storm/Event Accounting:

Description	GP Expense Job	GP Capital Job	GP VM Job
Storm Event EII Level			

Storm Contingency Fund (CFID 1748)

The Settlement in Docket No. DG 06-107, Exhibit GSE-7, approved by Order No. 24,777, calls for Granite State to establish a storm contingency fund. The fund would be used to pay for all of the operations and maintenance costs incurred by Granite State as the result of major storms. A major storm is defined as a severe weather event or events causing 30 concurrent troubles (i.e., interruption events occurring on either primary or secondary lines) and 15 percent of customers interrupted or 45 concurrent troubles.

The Settlement in Docket No. DE 13-063, approved in Order No. 25,738, entitles Liberty Utilities to recover certain costs if the weather forecast shows an EII Level of 3 or greater with a high probability of occurrence. The costs include pre-staging of crews, standby arrangements with external contractors, incremental compensation of employees, and other costs that may be incurred to prepare for a qualifying major storm.

INCIDENT COMMAND SYSTEM POSITIONS – Comments / Questions

1. Incident Commander:

2. On-Scene Commander / Regional Commander:

3. Resource Officer:

4. Logistics Officer:

5. Financial Officer:

6. Human Resources Officer:

7. Liaison Officer:

8. Information Officer:

9. System Control Center:

10. Customer Call Center:

11. Data Collection Officer:

12. Gas Operations:

13. IT Coordinator:

14. Safety & Health Officer:

15. Environment Officer:

16. Security/Facilities Officer:

Others:

NEXT MEETING

A. Date:
B. Time:
C. Location:
D. Liberty Storm Conference Call Number: **1-888-875-1833**
   Guest Passcode: **430980**
   Host Passcode: **4309805**

THIS PAGE INTENTIONALLY LEFT BLANK

Appendix *F*

All Events

	ID	Feeder	Date	Duration	CI	CMI	Town	Comments	Cause	Wind	Weather
1	42001	13L2	3/7/2018	63	1	63	SALEM	REATTACHED SERVICE P5 SHADOW LAKE RD DUE TO BROKEN TREE LIMB	Tree - Broken Limb	2-Wind-Strong (32-54 mph)	7-Snow-wet
2	42005	14L1	3/7/2018	96	1	96	PELHAM	SERVICE FROM P7 NANCY RIPPED DOWN BY LARGE TREE - REHUNG	Tree Fell	2-Wind-Strong (32-54 mph)	7-Snow-wet
3	42026	13L2	3/7/2018	73	291	44,827	SALEM	PTR 701213 PHASE C LOCKED OUT @ P5 ZION HILL RD, SALEM. CAUSE: TREE BRANCH PAST P44 ZION HILL RD. BRANCH REMOVED.	Tree - Broken Limb	2-Wind-Strong (32-54 mph)	7-Snow-wet
4	42034	13L2	3/7/2018	3790	18	68,220	SALEM	BLOWN 40K FUSE P1 MATTHEWS DR DUE TO FALLEN TREE MATTHEWS DR, SALEM.	Tree Fell	2-Wind-Strong (32-54 mph)	7-Snow-wet
5	42037	14L3	3/7/2018	82	89	7,298	PELHAM	BLOWN 65K FUSE P51 WINDHAM RD, PELHAM DUE TO BRANCH BETWEEN P53 & P56 WINDHAM RD, PELHAM	Tree - Broken Limb	2-Wind-Strong (32-54 mph)	7-Snow-wet
6	42071	18L4	3/7/2018	94	365	837,983	SALEM	PTR 701187 P47 PELHAM RD, SALEM LOCKED OUT. CLEARED LIMBS ON COMMERCIAL DRIVE, MULTIPLE LOCATIONS.	Tree - Broken Limb	2-Wind-Strong (32-54 mph)	7-Snow-wet
7	42137	13L3	3/8/2018	130	461	59,930	SALEM	PTR 701230 LOCKED OUT [PHASE B & C], P6 SCHOOL ST, SALEM. CAUSE: LIMB P25 SCHOOL ST, SALEM.	Tree - Broken Limb	2-Wind-Strong (32-54 mph)	7-Snow-wet
8	42151	18L2	3/8/2018	61	2018	1,542,855	SALEM	PTR 701015 RECLOSER LOCKED OUT @ P10 VETS MEMORIAL PKWY, SALEM, MULTIPLE TREE LIMBS AT VARIOUS LOCATIONS	Tree - Broken Limb	2-Wind-Strong (32-54 mph)	7-Snow-wet
9	42168	14L4	3/8/2018	1686	1034	1,297,722	PELHAM	14L4 BREAKER LOCKED OUT. CAUSE: LIMBS ON WIRES MULTIPLE LOCATIONS BRIDGE ST, PELHAM	Tree - Broken Limb	2-Wind-Strong (32-54 mph)	7-Snow-wet
10	42214	14L1	3/7/2018	4805	1	4,805	PELHAM	TREE P3 GLADYS ST, PELHAM. REHUNG SERVICE	Tree Fell	2-Wind-Strong (32-54 mph)	7-Snow-wet
11	42336	14L3	3/7/2018	2705	50	135,250	PELHAM	BLOWN 65K LINE FUSE P4 HOBBS - TREE AND WIRES DOWN NEAR P14 SIMPSON MILL RD	Tree Fell	2-Wind-Strong (32-54 mph)	7-Snow-wet
12	42338	14L2	3/7/2018	5158	37	190,846	PELHAM	BLOWN 25K LINE FUSE P28 SHERBURNE RD, PELHAM - DUE TO FALLEN TREE, MULTIPLE LIMBS SHERBURNE RD.	Tree Fell	2-Wind-Strong (32-54 mph)	7-Snow-wet
13	42410	10L4	3/8/2018	3618	1	3,618	SALEM	SERVICE P7 PATTEE RD DAMAGED DUE TO TREE P7 PATTEE RD.	Tree - Broken Limb	2-Wind-Strong (32-54 mph)	7-Snow-wet
14	42429	9L3	3/7/2018	589	103	60,667	SALEM	PTR 701076 P1.5 BROOKDALE RD, SALEM LOCKED OUT. DUE TO LIMBS & DEBRIS ON BROOKDALE RD, SALEM	Tree Fell	2-Wind-Strong (32-54 mph)	7-Snow-wet
15	42443	10L4	3/8/2018	587	244	143,228	SALEM	P4 BUTLER ST PTR 701078 LOCKED OUT DUE TO LARGE LIMB P26 BUTLER	Tree - Broken Limb	2-Wind-Strong (32-54 mph)	7-Snow-wet
16	42585	18L3	3/8/2018	487	698	339,926	SALEM	18L3 BREAKER LOCKED OPEN.- CAUSE: MULTIPLE FALLEN LIMBS ALONG THE SOUTH POLICY AND PLEASANT ST.	Tree - Broken Limb	2-Wind-Strong (32-54 mph)	7-Snow-wet
17	43223	14L2	3/7/2018	2941	23	67,643	PELHAM	BLOWN 40K FUSE P23 MAIN ST, PELHAM DUE TO STORM, MULTIPLE LIMBS ON WIRE MAIN ST & HEATHER LEE LANE. REMOVED.	Tree - Broken Limb	2-Wind-Strong (32-54 mph)	7-Snow-wet
18	42678	10L4	3/8/2018	3917	2	7,834	SALEM	DISCONNECTED SECONDARY WIRES AT P11 PATTEE RD DUE TO BROKEN POLE 12 PATTEE RD FROM A FALLEN TREE.	Tree Fell	2-Wind-Strong (32-54 mph)	7-Snow-wet
19	42687	14L3	3/8/2018	2280	321	392,238	PELHAM	MANUALLY OPENED P42 WINDHAM RD * FAILED DEADEND BELLS AND DISC. @ P41 REPAIRED PHASE OFF GLASS @ 39	Device Failed	2-Wind-Strong (32-54 mph)	7-Snow-wet
20	43001	12L1	3/8/2018	484	2	968	WALPOLE	BLOWN 25K LINE FUSE P81 VALLEY ROAD / PRIMARY IN CONTACT WITH NEUTRAL P1 EATON RD DUE TO SNOW	Unknown	2-Wind-Strong (32-54 mph)	7-Snow-wet
21	43129	13L3	3/8/2018	1636	2	3,272	SALEM	BLOWN FUSES P14 GEREMONTY DR. - LIMB P15 GEREMONTY	Tree - Broken Limb	2-Wind-Strong (32-54 mph)	7-Snow-wet
22	43189	18L3	3/8/2018	2062	6	12,372	SALEM	BLOWN FUSES P26 SOUTH POLICY. CAUSE UNKNOWN	Unknown	2-Wind-Strong (32-54 mph)	7-Snow-wet
23	45498	9L1	3/9/2018	2683	1	2,683	SALEM	SERVICE FROM P4 CHURCH AVE RECONNECTED	Tree - Broken Limb	2-Wind-Strong (32-54 mph)	7-Snow-wet
24	43754	14L2	3/7/2018	921	822	757,062	PELHAM	PTR# 704012 P5 BURNS RD, PELHAM LOCKED OUT - MULTIPLE TREES/BRANCHES FELL INTO PRMIARY	Tree - Broken Limb	2-Wind-Strong (32-54 mph)	7-Snow-wet

	ID	Feeder	Date	Duration	CI	CMI	Town	Comments	Cause	Wind	Weather
25	43241	9L3	3/7/2018	760	138	382,878	WINDHAM	BLOWN 65K FUSES SEARLES RD WINDHAM DUE TO TREES.	Tree Fell	2-Wind-Strong (32-54 mph)	7-Snow-wet
26	43275	9L1	3/8/2018	206	101	20,806	SALEM	MANUALLY OPENED 50K LINE FUSES P15 MAIN ST - EMERGENCY - LARGE TREE FELL, WIRES DOWN,	Tree Fell	2-Wind-Strong (32-54 mph)	7-Snow-wet
27	43416	10L2	3/8/2018	324	457	196,317	SALEM	PTR# 701013 P9 CLUFF RD, SALEM LOCKED OUT (2X OPS) DUE TO MULTIPLE TREES ALONG CLUFF	Tree - Broken Limb	2-Wind-Strong (32-54 mph)	7-Snow-wet
28	43479	10L2	3/8/2018	735	41	30,135	SALEM	BLOWN 40K FUSE AT P24 KELLY RD BETWEEN P 7-8 CHATHAM CIRCLE DOWNED PRIMARY AND SECONDARY	Tree Fell	2-Wind-Strong (32-54 mph)	7-Snow-wet
29	43702	10L4	3/8/2018	2725	37	100,825	SALEM	BLOWN 25K FUSE AT P19 WHEELER - TREE FELL AND CLEARED AT P2 ASHWOOD PRIMARIES AND SECONDARIES DOWN BETWEEN P's 1-4	Tree Fell	2-Wind-Strong (32-54 mph)	7-Snow-wet
30	43720	10L2	3/8/2018	2783	25	69,575	SALEM	BLOWN 25K FUSE AT P2 COLE ST SALEM DUE TO FALLEN TREE AT AT P3 GARRISON. DOWNED SERVICE WIRE.	Tree Fell	2-Wind-Strong (32-54 mph)	7-Snow-wet
31	45259	10L2	3/9/2018	603	63	37,989	SALEM	BLOWN 40K FUSE (1 OF 3) CENTER PHASE AT P7 BARRON AVE . TREE LIMBS ON LINE BETWEEN POLES 2 & 3 HAIGH ST.	Tree - Broken Limb	2-Wind-Strong (32-54 mph)	7-Snow-wet
32	43746	10L4	3/8/2018	3102	1	3,102	SALEM	REHUNG SERVICE FROM P25-1 WHEELER AVE	Tree Fell	2-Wind-Strong (32-54 mph)	7-Snow-wet
33	42624	14L2	3/8/2018	1633	81	132,273	PELHAM	LINE FUSE OPEN P16 BUSH HILL, PELHAM - CAUSE: TREE DOWN @ #123 BUSH HILL & LIMBS DOWN OTHER LOCATIONS	Tree Fell	2-Wind-Strong (32-54 mph)	7-Snow-wet
34	42901	14L2	3/8/2018	536	1977	4,071,587	PELHAM	14L2 BREAKER LOCKED OUT DUE TO MULTIPLE FALLEN TREES	Tree Fell	2-Wind-Strong (32-54 mph)	7-Snow-wet
35	46939	14L2	3/8/2018	3216	904	2,907,264	PELHAM	PTR# 704008 P5 NASHUA RD, PELHAM LOCKED OUT - MULTIPLE TREES/BRANCHES FELL INTO PRMIARY	Tree Fell	2-Wind-Strong (32-54 mph)	7-Snow-wet
36	47066	14L2	3/8/2018	3868	305	1,179,740	PELHAM	PTR# 704020 P127 MAMMOTH RD, PELHAM LOCKED OUT - MULTIPLE TREES/BRANCHES FELL INTO PRMIARY	Tree Fell	2-Wind-Strong (32-54 mph)	7-Snow-wet
37	46727	14L2	3/10/2018	1002	37	37,074	PELHAM	MANUALLY OPENED 15K LINE FUSE P84 MAMMOTH RD FOR REPAIRS	Tree - Broken Limb	2-Wind-Strong (32-54 mph)	7-Snow-wet
38	46728	14L2	3/10/2018	219	119	26,061	PELHAM	MANUALLY OPENED 65K FUSE P115 MAMMOTH RD TO MAKE REPAIRS ON JEREMY HILL RD	Tree - Broken Limb	2-Wind-Strong (32-54 mph)	7-Snow-wet
39	46729	14L2	3/10/2018	219	50	10,950	PELHAM	MANUALLY OPENED 40K FUSE P1 MADISON AVE TO MAKE REPAIRS ON JEFFERSON AVE	Tree - Broken Limb	2-Wind-Strong (32-54 mph)	7-Snow-wet
40	46730	14L2	3/10/2018	219	14	3,066	PELHAM	MANUALLY OPENED 15K FUSE P11 BROOKVIEW DR TO MAKE REPAIRS ON HOMESTEAD RD	Tree - Broken Limb	2-Wind-Strong (32-54 mph)	7-Snow-wet
41	46731	14L2	3/10/2018	219	29	6,351	PELHAM	MANUALLY OPENED 25K FUSE P20 NASHUA RD TO MAKE REPAIRS ON COLONIAL DR AND INDEPENDENCE DR	Tree - Broken Limb	2-Wind-Strong (32-54 mph)	7-Snow-wet
42	46814	14L2	3/11/2018	347	1	347	PELHAM	TREE LIMB ON SERVICE P15 BROOKVIEW DR, PELHAM. REPLACED SERVICE	Tree - Broken Limb	2-Wind-Strong (32-54 mph)	7-Snow-wet
43	46893	14L2	3/12/2018	157	1	157	PELHAM	TREE FELL ON SERVICE- SPLICED SERVICE AND REHUNG- GUMPUS HILL RD, PELHAM NH	Tree Fell	2-Wind-Strong (32-54 mph)	7-Snow-wet
44	43782	9L3	3/8/2018	1814	25	45,350	SALEM	BlOWN FUSE P1 W SHORE RD DUE TO DAMAGED POLE TOP AT WOODVUE RD. TREES IN WIRES.	Tree Fell	2-Wind-Strong (32-54 mph)	7-Snow-wet
45	44772	9L3	3/7/2018	1274	62	78,988	SALEM	BLOWN FUSE P23 N POLICY ST. CAUSE UNKNOWN	Unknown	2-Wind-Strong (32-54 mph)	7-Snow-wet
46	45015	9L3	3/7/2018	1542	42	64,764	SALEM	BLOWN 40K LINE FUSE P1 WEST DUSTON DUE TO FALLEN TREE AT P4 WEST DUSTON RD	Tree Fell	2-Wind-Strong (32-54 mph)	7-Snow-wet
47	45133	13L2	3/8/2018	1325	252	333,900	WINDHAM	BLOWN FUSE P28 ROCKINGHAM RD WINDHAM (ROAD PHASE CLOSED). CAUSE UNKNOWN	Unknown	2-Wind-Strong (32-54 mph)	7-Snow-wet

	ID	Feeder	Date	Duration	CI	CMI	Town	Comments	Cause	Wind	Weather
48	45188	13L2	3/8/2018	848	2	1,696	WINDHAM	BLOWN 15K LINE FUSE P4 SHADOW LAKE RD DUE TO BRANCH ON LINES	Tree - Broken Limb	2-Wind-Strong (32-54 mph)	7-Snow-wet
49	45222	9L3	3/8/2018	2144	42	90,048	WINDHAM	BLOWN FUSE ROULSTON RD AND SEARLES RD FEEDING ROULSTON RD. PRIMARY DOWN BETWEEN P4-5 ROULSTON RD.	Tree Fell	2-Wind-Strong (32-54 mph)	7-Snow-wet
50	45238	9L3	3/8/2018	2400	3	7,200	WINDHAM	BLOWN FUSE P38 ROCKINGHAM RD. MIDDLE PHASE WIRES DOWN AT ROULSTON RD	Tree Fell	2-Wind-Strong (32-54 mph)	7-Snow-wet
51	45277	9L3	3/9/2018	3317	2	6,634	WINDHAM	BLOWN 15K FUSE P16 SEARLES CASTLE RD - BROKEN P15-1 REPLACED AND TRANSFERRED	Tree Fell	2-Wind-Strong (32-54 mph)	7-Snow-wet
52	45299	9L3	3/9/2018	2886	1	2,886	SALEM	CUSTOMER MADE REPAIRS AND SERVICE REHUNG FROM P58 N POLICY	Tree - Broken Limb	2-Wind-Strong (32-54 mph)	7-Snow-wet
53	45324	9L3	3/8/2018	1797	21	37,737	WINDHAM	BLOWN 50K FUSE P3 JOHNSON RD - TREES ON BIRCHWOOD	Tree Fell	2-Wind-Strong (32-54 mph)	7-Snow-wet
54	45383	9L3	3/8/2018	41	516	21,156	WINDHAM	MANUALLY OPENED PTR 701013 P7 RANGE RD FROM POLICE/FIRE REQUEST	Unknown	2-Wind-Strong (32-54 mph)	7-Snow-wet
55	45396	13L2	3/9/2018	10	2	20	WINDHAM	BLOWN 10K FUSE P26 ROCKINGHAM RD - LARGE LIMBS REMOVED FROM TREE ON JONES RD	Tree Fell	2-Wind-Strong (32-54 mph)	7-Snow-wet
56	45402	9L3	3/9/2018	339	1	339	SALEM	REHUNG SERVICE FROM P6 LAKE SHORE RD - TREE LIMB	Tree - Broken Limb	2-Wind-Strong (32-54 mph)	7-Snow-wet
57	45404	9L3	3/9/2018	1953	2	3,906	WINDHAM	BLOWN 15K TRANSFORMER FUSE P5 JOHNSON RD - REHUNG SERVICE FROM P5 JOHNSON RD - TREE LIMBS ON SERVICE	Tree - Broken Limb	2-Wind-Strong (32-54 mph)	7-Snow-wet
58	45465	9L3	3/9/2018	2394	1	2,394	SALEM	REATTACHED SERVICE FROM P9-50 PLEASEANT ST	Tree - Broken Limb	2-Wind-Strong (32-54 mph)	7-Snow-wet
59	45751	13L2	3/9/2018	1680	48	80,640	SALEM	BLOWN 65K FUSE AT P33 LAKE ST - PRIMARY DOWN BETWEEN P19-20 SAMOSET DR	Tree Fell	2-Wind-Strong (32-54 mph)	7-Snow-wet
60	45965	9L3	3/9/2018	1665	20	33,300	WINDHAM	BLOWN 25K FUSE P6 JOHNSON RD - TREES ON ROLLING RIDGE RD	Tree - Broken Limb	2-Wind-Strong (32-54 mph)	7-Snow-wet
61	46692	9L3	3/10/2018	945	1	945	SALEM	REPAIRED SERVICE WIRES AT P9-50 PLEASANT ST.	Tree - Broken Limb	2-Wind-Strong (32-54 mph)	7-Snow-wet
62	46825	9L3	3/10/2018	1610	135	217,350	WINDHAM	BLOWN 65K FUSE (1 OF 3) P26 RANGE RD - CAUSE UNKNOWN	Unknown	2-Wind-Strong (32-54 mph)	7-Snow-wet
63	42080	13L2	3/7/2018	125	291	36,375	SALEM	P5 ZION HILL RD, SALEM PTR 701213 LOCKED OPEN [PHASE B & C]. CAUSE: MULTIPLE LIMBS. CLEARED LIMB @ P44 ZION HILL RD.	Tree - Broken Limb	2-Wind-Strong (32-54 mph)	7-Snow-wet
64	42844	13L2	3/8/2018	3218	30	96,540	SALEM	BLOWN 50K FUSE P16 SHADOW LAKE - TREE AND WIRES DOWN ON DOIRON RD	Tree - Broken Limb	2-Wind-Strong (32-54 mph)	7-Snow-wet
65	45995	13L2	3/9/2018	1421	1	1,421	SALEM	REATTACHED SERVICE TO P3 LAKE ST - TREE LIMB	Tree - Broken Limb	2-Wind-Strong (32-54 mph)	7-Snow-wet
66	45996	13L2	3/9/2018	2276	1	2,276	SALEM	SERVICE FROM P12 LAKE REHUNG - TREE LIMBS	Tree - Broken Limb	2-Wind-Strong (32-54 mph)	7-Snow-wet
67	46785	13L2	3/11/2018	570	1	570	SALEM	TREE BRANCH TORE DOWN SERVICE FROM P18 GROVE AVE - CREW RE INSTALLED TRIPLEX	Tree - Broken Limb	2-Wind-Strong (32-54 mph)	7-Snow-wet
68	46789	13L2	3/11/2018	40	6	240	SALEM	CREW OPENED 15K TRANSFORMER FUSE P11 LAKE ST TO REPAIR SECONDARIES DUE TO TREE CONTACT P11 LAKE ST	Tree - Broken Limb	2-Wind-Strong (32-54 mph)	7-Snow-wet
69	46904	13L2	3/8/2018	2126	1944	3,722,402	SALEM	LOSS OF NATIONAL GRID 2376 LINE DUE TO FALLEN TREE AT 23KV MASSACHUSSETS ROW	Tree Fell	2-Wind-Strong (32-54 mph)	7-Snow-wet
70	45241	13L1	3/8/2018	1894	8	15,152	SALEM	BLOWN FUSE P35 NORTH MAIN ST. PRIMARY DOWN BETWEEN NORTH MAIN AND JENNINGS RD	Tree - Broken Limb	2-Wind-Strong (32-54 mph)	7-Snow-wet
71	45423	13L1	3/8/2018	3502	1	3,502	SALEM	REPLACED SERVICE FROM P4 GLEN RD - TREE FELL P4 GLEN	Tree Fell	2-Wind-Strong (32-54 mph)	7-Snow-wet

	ID	Feeder	Date	Duration	CI	CMI	Town	Comments	Cause	Wind	Weather
72	45426	13L1	3/8/2018	3849	2	7,698	SALEM	SECONDARY AND SERVICE RESTORED FROM P3 ELSIE AVE - TREE P3 ELSIE AVE	Tree - Broken Limb	2-Wind-Strong (32-54 mph)	7-Snow-wet
73	45885	13L1	3/8/2018	2070	2219	5,520,078	SALEM	LOSS OF NATIONAL GRID 2376 LINE DUE TO FALLEN TREE AT 23KV MASSACHUSSETS ROW	Tree Fell	2-Wind-Strong (32-54 mph)	7-Snow-wet
74	45897	13L1	3/9/2018	4204	1	4,204	SALEM	REATTACHED SERVICE AT P7 TO P7-1 ATKINSON RD - TREE LIMB P7-1	Tree - Broken Limb	2-Wind-Strong (32-54 mph)	7-Snow-wet
75	45904	13L1	3/9/2018	825	73	60,225	DERRY	BLOWN 40K LINE FUSE P13 ERMER RD, DERRY - CLEARED & PATROLLED - MANY LIMBS	Tree - Broken Limb	2-Wind-Strong (32-54 mph)	7-Snow-wet
76	45976	13L1	3/9/2018	2315	2	4,630	SALEM	RE-INSTALLED SECONDARY P7 TO P7-80 ATKINSON RD DUE TO FALLEN TREE	Tree Fell	2-Wind-Strong (32-54 mph)	7-Snow-wet
77	45979	13L1	3/10/2018	1440	8	11,520	SALEM	BLOWN 6K LINE FUSE P10 HENRY TAYLOR ST - TREE AND WIRES DOWN ON KING ST	Tree Fell	2-Wind-Strong (32-54 mph)	7-Snow-wet
78	45980	13L1	3/9/2018	577	50	28,850	SALEM	BLOWN 25K FUSE P168 N. MAIN ST SALEM - LIMBS ON PARKER CIR	Tree - Broken Limb	2-Wind-Strong (32-54 mph)	7-Snow-wet
79	45982	13L1	3/9/2018	519	27	14,013	SALEM	BLOWN 40K LINE FUSE P4 CHAPPY LN - TREE LIMBS	Tree - Broken Limb	2-Wind-Strong (32-54 mph)	7-Snow-wet
80	46194	13L1	3/9/2018	753	6	4,518	DERRY	BLOWN 15K TRANSFORMER FUSE P9 LADY LN - TREE LIMBS REMOVED BY TREE CREW	Tree - Broken Limb	2-Wind-Strong (32-54 mph)	7-Snow-wet
81	46651	13L1	3/9/2018	927	73	67,671	SALEM	BLOWN 40K FUSE P13 ERMER RD, SALEM - CAUSE UNKNOWN	Unknown	2-Wind-Strong (32-54 mph)	7-Snow-wet
82	46709	13L1	3/10/2018	1370	1	1,370	SALEM	TWO SECTIONS OF SECONDARY REHUNG FROM P67 SHORE DR - CAUSE: TREE LIMBS P67 SHORE DR, SALEM	Tree - Broken Limb	2-Wind-Strong (32-54 mph)	7-Snow-wet
83	42816	13L3	3/8/2018	855	2588	2,230,874	SALEM	LOSS OF NATIONAL GRID 2376 LINE DUE TO FALLEN TREE AT 23KV MASSACHUSSETS ROW	Tree Fell	2-Wind-Strong (32-54 mph)	7-Snow-wet
84	43129	13L3	3/8/2018	1636	2	3,272	SALEM	BLOWN FUSES P14 GEREMONTY DR. - LIMB P15 GEREMONTY	Tree - Broken Limb	2-Wind-Strong (32-54 mph)	7-Snow-wet
85	45384	13L3	3/8/2018	2001	11	22,011	SALEM	BLOWN 10K TRANSFORMER FUSE P38 BRIDGE ST - CREWS PATROLLED LINE AND CLEARED BRANCHES	Tree - Broken Limb	2-Wind-Strong (32-54 mph)	7-Snow-wet
86	45390	13L3	3/8/2018	2736	155	424,080	SALEM	BLOWN 40K LINE FUSE P10 WHEELER AVE - CREWS MADE REPAIRS IN VARIOUS AREAS ON OLD COACH RD AND PALOMINO RD	Tree Fell	2-Wind-Strong (32-54 mph)	7-Snow-wet
87	45394	13L3	3/8/2018	2065	24	49,560	SALEM	BLOWN 25K FUSE P23 BRIDGE - BRANCHES ON STANWOOD	Tree - Broken Limb	2-Wind-Strong (32-54 mph)	7-Snow-wet
88	45395	13L3	3/8/2018	2302	9	20,718	SALEM	BLOWN 15K TRANSFORMER FUSE P6 SHERWOOD CIR - LIMB P6 SHERWOOD CIR	Tree - Broken Limb	2-Wind-Strong (32-54 mph)	7-Snow-wet
89	45397	13L3	3/8/2018	2302	29	66,758	SALEM	BLOWN 25K FUSE P4 SHERWOOD CIRCLE - CLEARED BRANCHES ON TAMMY ST	Tree - Broken Limb	2-Wind-Strong (32-54 mph)	7-Snow-wet
90	46719	13L3	3/10/2018	847	1	847	SALEM	TREE LIMB ON SERVICE FROM P9-2 WELSH CIR, SALEM TO HOUSE.	Tree - Broken Limb	2-Wind-Strong (32-54 mph)	7-Snow-wet
91	46756	13L3	3/10/2018	1027	1	1,027	SALEM	SERVICE REHUNG FROM P11 HENDERSON CIR	Tree - Broken Limb	2-Wind-Strong (32-54 mph)	7-Snow-wet
92	46790	13L3	3/11/2018	770	1	770	SALEM	SERVICE DOWN DUE TO TREE P18 BRIDGE ST, SALEM	Tree - Broken Limb	2-Wind-Strong (32-54 mph)	7-Snow-wet
93	42669	18L2	3/8/2018	615	2018	1,241,070	SALEM	18L2 CB LOCKED OUT. - TREE CONDITIONS ALL ALONG CROSS ST AND BRADY AVE	Tree Fell	2-Wind-Strong (32-54 mph)	7-Snow-wet
94	44728	18L2	3/8/2018	193	51	9,843	SALEM	BLOWN 25K FUSE AT P6 S. POLICY ST. SALEM TREE BRANCHES REMOVED FROM LINES	Tree - Broken Limb	2-Wind-Strong (32-54 mph)	7-Snow-wet
95	44790	13L3	3/8/2018	3673	1	3,673	SALEM	REPLACED SECONDARY WIRES AT HENDERSON AVE	Tree - Broken Limb	2-Wind-Strong (32-54 mph)	7-Snow-wet

	ID	Feeder	Date	Duration	CI	CMI	Town	Comments	Cause	Wind	Weather
96	45048	13L3	3/8/2018	2330	11	25,630	SALEM	BLOWN 15K TRANSFORMER FUSE P2 TOWNSEND - BRANCH	Tree - Broken Limb	2-Wind-Strong (32-54 mph)	7-Snow-wet
97	45057	13L3	3/8/2018	2803	1	2,803	SALEM	TREE REMOVED AND SERVICE REPAIRED AT THERIAULT AVE	Tree Fell	2-Wind-Strong (32-54 mph)	7-Snow-wet
98	45085	13L3	3/8/2018	1562	13	20,306	SALEM	BLOWN FUSE P9 MEISNER RD DUE TO FALLEN TREE.	Tree Fell	2-Wind-Strong (32-54 mph)	7-Snow-wet
99	45179	13L3	3/9/2018	3126	1	3,126	SALEM	REHUNG SERVICE WIRES AT ROYAL CIR DUE TO BROKEN LIMB	Tree - Broken Limb	2-Wind-Strong (32-54 mph)	7-Snow-wet
100	45243	13L3	3/9/2018	3374	1	3,374	SALEM	SERVICE REHUNG FROM P3 MCLAUGHLIN AVE - LRG TREE FELL	Tree Fell	2-Wind-Strong (32-54 mph)	7-Snow-wet
101	45311	13L3	3/9/2018	3241	1	3,241	SALEM	SERVICE REHUNG FROM P2 PARK AVE - TREE LIMB	Tree - Broken Limb	2-Wind-Strong (32-54 mph)	7-Snow-wet
102	45416	13L3	3/9/2018	1528	1	1,528	SALEM	REHUNG SERVICE P11 GENERAL PULASKI DR - BRANCH	Tree - Broken Limb	2-Wind-Strong (32-54 mph)	7-Snow-wet
103	45482	13L3	3/9/2018	281	58	16,298	SALEM	BLOWN 65K FUSE P26 BRIDGE ST - TREE FELL MATTHIAS ST	Tree Fell	2-Wind-Strong (32-54 mph)	7-Snow-wet
104	45482X	13L3	3/8/2018	1723	758	1,306,034	SALEM	PTR 701225 LOCKED OUT, P4 BRIDGE ST ST, SALEM. CAUSE: MULTIPLE LIMBS ALONG BRIDGE ST AND WHEELER AVE	Tree - Broken Limb	2-Wind-Strong (32-54 mph)	7-Snow-wet
105	45962	13L3	3/9/2018	1392	1	1,392	SALEM	REHUNG SERVICE P11 PALOMINO RD	Tree - Broken Limb	2-Wind-Strong (32-54 mph)	7-Snow-wet
106	46688	18L2	3/9/2018	1687	121	204,127	SALEM	MANUALLY OPENED 80K LINE FUSE P1 SALEM ST - REPAIRS NEEDED AT P16 SALEM ST	Unknown	2-Wind-Strong (32-54 mph)	7-Snow-wet
107	46629	14L1	3/8/2018	1023	1851	1,893,573	PELHAM	14L2 BREAKER LOCKED OUT DUE TO MULTIPLE FALLEN TREES	Tree Fell	2-Wind-Strong (32-54 mph)	7-Snow-wet
108	46677	14L1	3/8/2018	2734	217	593,278	PELHAM	BLOWN 65K FUSE P47 DUTTON RD - BROKEN P20 SPRING - REPLACED 25KVA XFMR - MULTIPLE TREES	Tree Fell	2-Wind-Strong (32-54 mph)	7-Snow-wet
109	46703	14L1	3/9/2018	1740	62	107,880	PELHAM	BLOWN 25KV LINE FUSE P42 JERICHO RD - MULTIPLE TREES ON HILLCREST	Tree Fell	2-Wind-Strong (32-54 mph)	7-Snow-wet
110	46766	14L1	3/10/2018	255	1	255	PELHAM	CREWS MADE REPAIRS TO BROKEN HOUSE SERVICE FROM P3 APPALOOSA	Tree - Broken Limb	2-Wind-Strong (32-54 mph)	7-Snow-wet
111	46767	14L1	3/10/2018	255	6	1,530	PELHAM	REPAIRED SECONDARY WIRES AT POLE 7 APPALOOSA AVE	Tree - Broken Limb	2-Wind-Strong (32-54 mph)	7-Snow-wet
112	42715	14L3	3/7/2018	1985	140	277,900	PELHAM	40 K LINE FUSE OPENED P24 WINDHAM RD * TREE REPAIRS ON SIMPSON RD	Tree Fell	2-Wind-Strong (32-54 mph)	7-Snow-wet
113	42848	14L3	3/7/2018	3674	1158	3,005,552	PELHAM	PTR 704057 LOCKED OUT. MULTIPLE TREE LIMBS ALONG TALLANT RD / MAMMOTH RD	Tree - Broken Limb	2-Wind-Strong (32-54 mph)	7-Snow-wet
114	45943	14L3	3/7/2018	2725	321	874,725	PELHAM	MANUALLY OPENED PTR 704072 DUE TO POLE FIRE @ P38 WINDHAM RD, PELHAM. PHASE OFF PIN	Device Failed	2-Wind-Strong (32-54 mph)	7-Snow-wet
115	46195	14L3	3/7/2018	3786	41	155,226	PELHAM	BLOWN 40K FUSE P86 BRIDGE ST - MULTIPLE TREES/BRANCHES ON BALCOM RD	Tree - Broken Limb	2-Wind-Strong (32-54 mph)	7-Snow-wet
116	46755	14L3	3/10/2018	687	3	2,061	PELHAM	TWO SPANS SERVICE REHUNG FROM P8 SIMPSON RD	Tree - Broken Limb	2-Wind-Strong (32-54 mph)	7-Snow-wet
117	46757	14L3	3/10/2018	1144	1	1,144	PELHAM	SERVICE REHUNG FROM P2-1 KEYES HILL RD	Tree - Broken Limb	2-Wind-Strong (32-54 mph)	7-Snow-wet
118	46810	14L3	3/11/2018	408	28	11,424	PELHAM	BLOWN 25K FUSE P1 CASTLE HILL RD WINDHAM DUE TO LIMB P3 CASTLE HILL RD.	Tree - Broken Limb	2-Wind-Strong (32-54 mph)	7-Snow-wet
119	46848	14L3	3/11/2018	236	1	236	PELHAM	P5 HOBBS RD, CLEARED TREE - REATTACHED SERVICE WIRE	Tree Fell	2-Wind-Strong (32-54 mph)	7-Snow-wet

	ID	Feeder	Date	Duration	CI	CMI	Town	Comments	Cause	Wind	Weather
120	45244	14L4	3/7/2018	2206	131	288,986	PELHAM	PRIMARY DOWN P26 WEBSTER AVE. FUSES OPEN P63 BRIDGE ST.	Tree Fell	2-Wind-Strong (32-54 mph)	7-Snow-wet
121	45245	14L4	3/7/2018	2261	29	65,569	PELHAM	OPEN 25AMP LINE FUSE AT P63 BRIDGE ST / DUE TO PRIMARY DOWN AT P9, P10, AND P11 SURREY LN	Tree - Broken Limb	2-Wind-Strong (32-54 mph)	7-Snow-wet
122	45246	14L4	3/7/2018	2466	185	456,210	PELHAM	MANUALL OPENED LINE FUSE P8 YOUNGS CROSSING RD / DUE TO MULTIPLE TREE CONTACTS	Tree - Broken Limb	2-Wind-Strong (32-54 mph)	7-Snow-wet
123	45248	14L4	3/7/2018	2234	16	35,744	PELHAM	MANUALLY OPENED FUSE FEEDING PLOWER RD / / CAUSE - MULTIPLE TREE CONTACTS	Tree - Broken Limb	2-Wind-Strong (32-54 mph)	7-Snow-wet
124	45250	14L4	3/7/2018	2311	83	191,813	PELHAM	BLOWN 40K SIDE TAP FUSE P49 BRIDGE ST/ TREE ON PRIMARY P3 WHEATON DRIVE /	Tree - Broken Limb	2-Wind-Strong (32-54 mph)	7-Snow-wet
125	45252	14L4	3/7/2018	2450	216	529,200	PELHAM	BLOWN 40 AMP LINE FUSE -P35 BRIDGE ST - DUE TO MULTIPLE TREE CONTACTS IN AREA OF OLD-GAGE AND LEDGE RD	Tree - Broken Limb	2-Wind-Strong (32-54 mph)	7-Snow-wet
126	45253	14L4	3/9/2018	145	114	16,530	PELHAM	3 BLOWN 65K FUSES AT P63 BRIDGE ST PELHAM. TREE AT P80 WEST.	Tree - Broken Limb	2-Wind-Strong (32-54 mph)	7-Snow-wet
127	45254	14L4	3/7/2018	2251	69	155,319	PELHAM	FUSE FEEDING ORCHARD LANE, ST MARGERETS DR OPEN [P1 ORCHARD LANE, PELHAM]. CAUSE: TREES & WIRES DOWN	Tree Fell	2-Wind-Strong (32-54 mph)	7-Snow-wet
128	45991	14L4	3/10/2018	797	1	797	PELHAM	REHUNG SERVICE P49-3 OLD GAGE HILL- TREE LIMBS	Tree - Broken Limb	2-Wind-Strong (32-54 mph)	7-Snow-wet
129	46802	14L4	3/11/2018	162	1	162	PELHAM	SERVICE REATTACHED FROM P14 KENNEDY DR	Tree - Broken Limb	2-Wind-Strong (32-54 mph)	7-Snow-wet
130	45051	18L3	3/8/2018	4027	1	4,027	SALEM	SERVICE RESTORED FROM P36 PELHAM RD	Tree - Broken Limb	2-Wind-Strong (32-54 mph)	7-Snow-wet
131	45405	18L3	3/9/2018	3277	1	3,277	SALEM	NEW SERVICE RUN FROM P40 PELHAM RD	Tree Fell	2-Wind-Strong (32-54 mph)	7-Snow-wet
132	42618	18L4	3/7/2018	625	365	228,125	SALEM	PTR 701187 P47 PELHAM RD LOCKOUT DUE TO FALLEN TREE LIMBS ALONG PELHAM RD. MANUALLY OPENED P21 BRADY AVE - CAUSE: WIRES DOWN P16 BRADY DUE TO TREE	Tree - Broken Limb	2-Wind-Strong (32-54 mph)	7-Snow-wet
133	45075	18L4	3/8/2018	1763	60	105,780	SALEM	BLOWN 40K LINE FUSE P8 LOWELL RD TREE PULLED SERVICE DOWN HOUSE 57 DAISY OFF P6-1 LAUREL.	Tree Fell	2-Wind-Strong (32-54 mph)	7-Snow-wet
134	45110	18L4	3/8/2018	2185	83	181,355	SALEM	BLOWN 40K LINE FUSE P34 LOWELL RD. TREE LIMB FELL ON PRIMARY BETWEEN P34 LOWELL RD AND POLE 1 QUILL LANE	Tree - Broken Limb	2-Wind-Strong (32-54 mph)	7-Snow-wet
135	45251	18L4	3/8/2018	3525	1	3,525	SALEM	RESTORED SERVICE WIRES FROM P15 BRADY AVE	Tree - Broken Limb	2-Wind-Strong (32-54 mph)	7-Snow-wet
136	45256	18L4	3/8/2018	2444	106	259,064	SALEM	BLOWN FUSE P64 BROOKDALE RD AND BRADY AVE LIMBS ON BROOKDALE RD BETWEEN POLES 64-63, 61-2 AND 69-68	Tree Fell	2-Wind-Strong (32-54 mph)	7-Snow-wet
137	45257	18L4	3/8/2018	2336	50	116,800	SALEM	BLOWN FUSE P50 BRADY AVE. LIMBS ON PRIMARY WIRES BETWEEN POLES 51-52. PRIMARY OFF GLASS POLE 75 PELHAM RD. P85 PELHAM RD - TREE ON PRIMARY LINES	Tree Fell	2-Wind-Strong (32-54 mph)	7-Snow-wet
138	45977	18L4	3/10/2018	2406	1	2,406	SALEM	BLOWN 15K TRANSFORMER FUSE P3 SPEARS HILL RD - TREE FELL P3 SPEARS HILL	Tree Fell	2-Wind-Strong (32-54 mph)	7-Snow-wet
139	42758	10L1	3/8/2018	662	890	589,180	SALEM	10L1 CB LOCKED OUT DUE TO TREE ON PRIMARY P32 & P14 POND ST	Tree Fell	2-Wind-Strong (32-54 mph)	7-Snow-wet
140	46652	10L1	3/11/2018	170	1	170	SALEM	REATTACHED SERVICE AND ENERGIZED FROM P19 POND ST	Tree - Broken Limb	2-Wind-Strong (32-54 mph)	7-Snow-wet
141	46836	10L1	3/11/2018	174	1	174	SALEM	LIMB ON SERVICE CLEARED P15 CAROL AVE, SALEM TO HOUSE-TRIPLEX REPLACED	Tree - Broken Limb	2-Wind-Strong (32-54 mph)	7-Snow-wet
142	46770	10L2	3/11/2018	419	1	419	SALEM	RECONNECT SERVICE WIRES P33 LAWRENCE RD, SALEM DUE TO TREE LIMB P33 LAWRENCE RD,	Tree - Broken Limb	2-Wind-Strong (32-54 mph)	7-Snow-wet

	ID	Feeder	Date	Duration	CI	CMI	Town	Comments	Cause	Wind	Weather
143	45044	10L4	3/8/2018	1254	178	223,212	SALEM	BLOWN 65K FUSE AT P1 LINWOOD RD SALEM MULTIPLE TREES AND CONDUCTORS DOWN ON MULBERRY CYPRESS POPLAR RUTH AND CHESTNUT STREETS	Tree Fell	2-Wind-Strong (32-54 mph)	7-Snow-wet
144	45045	10L4	3/8/2018	3526	1	3,526	SALEM	LAWRENCE RD SALEM SINGLE CUSTOMER SERVICE LINE CUT FROM POLE.	Tree Fell	2-Wind-Strong (32-54 mph)	7-Snow-wet
145	45417	10L4	3/9/2018	1607	11	17,677	SALEM	BLOWN 15K TRANSFORMER FUSE P6 CYPRESS ST - TREE FELL - CREW REPLACED 3 SECTIONS OF PRIMARY AND RECONNECTED 4 SERVICES	Tree Fell	2-Wind-Strong (32-54 mph)	7-Snow-wet
146	45468	10L4	3/9/2018	1527	1	1,527	SALEM	REHUNG SERVICE P3 BARBARA	Tree - Broken Limb	2-Wind-Strong (32-54 mph)	7-Snow-wet
147	45502	10L4	3/10/2018	199	2	398	SALEM	SERVICE REHUNG P26 BUTLER	Tree - Broken Limb	2-Wind-Strong (32-54 mph)	7-Snow-wet
148	45992	10L4	3/10/2018	416	1	416	SALEM	REHUNG SERVICE OFF P2 RUTH ST - TREE LIMBS	Tree - Broken Limb	2-Wind-Strong (32-54 mph)	7-Snow-wet
149	46821	10L4	3/11/2018	557	1	557	SALEM	TREE LIMB ON SERVICE FROM P2 ROSEWOOD AVE, SALEM. INSTALLED SERVICE WIRES	Tree - Broken Limb	2-Wind-Strong (32-54 mph)	7-Snow-wet
150	46845	10L4	3/11/2018	312	1	312	SALEM	SERVICE DOWN P12 PATTEE RD DUE TO LIMB. RE-HUNG SERVICE WIRES TO 24 PATTEE RD	Tree - Broken Limb	2-Wind-Strong (32-54 mph)	7-Snow-wet
151	43001	12L1	3/8/2018	484	2	968	WALPOLE	BLOWN 25K LINE FUSE P81 VALLEY ROAD / PRIMARY IN CONTACT WITH NEUTRAL P1 EATON RD DUE TO SNOW	Unknown	2-Wind-Strong (32-54 mph)	7-Snow-wet
152	45170	12L1	3/8/2018	154	1216	187,264	WALPOLE	PTR 741026 P100 WHITCOMB RD, WALPOLE LOCKED OUT. CAUSE: TREE LIMB ACROSS 3 PHASES P119 RIVER RD, ALSTEAD.	Tree - Broken Limb	2-Wind-Strong (32-54 mph)	7-Snow-wet
153	45242	16L5	3/9/2018	826	1	826	LEBANON	BLOWN 15K LINE FUSE P8 DOROTHY PERLEY RD - TREE FELL BETWEEN P8 AND P9 DOROTHY-PERLEY RD	Tree Fell	2-Wind-Strong (32-54 mph)	7-Snow-wet
154	46889	40L1	3/12/2018	65	6	390	CHARLESTOWN	10K TRANSFORMER FUSE / P1 SCENIC-HILL RD / SQUIRREL CONTACT	Animal	2-Wind-Strong (32-54 mph)	7-Snow-wet

THIS PAGE INTENTIONALLY LEFT BLANK

Appendix *G*

Storm Timeline

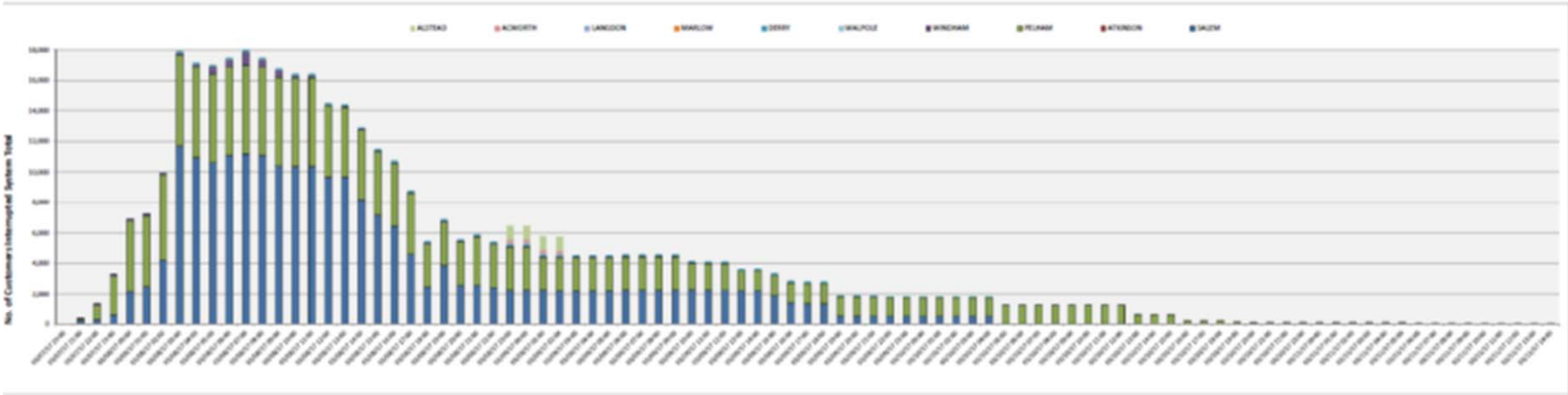

THIS PAGE INTENTIONALLY LEFT BLANK

6. NHPUC Information Requests dated April 6, 2018

6-1. Number of services replaced.
Approximately 15 services were replaced as a result of Storm Quinn. These numbers may change as review of storm charges continue. There were approximately 80 services that required to be disconnected so that customer repairs could be made and later inspected. Several other services were required to be re-hung or reconnected after extensive damage from fallen trees or limbs. There were 320 reported wires down from the primary and secondary.

6-2. Amount of secondary wire replaced (in feet).
Approximately 1,800 feet of secondary wire was replaced as a result of Storm Quinn.

6-3. Amount of primary wire (in feet, indicating size and I ph, 2ph, 3ph, mainline).
Several sections of primary wire throughout the southern NH territory needed to be reconnected or re-hung due to the extensive amount of fallen trees and tree limbs in the area. Several of these sections required a minimal amount of primary wire added to splice the conductors back together. It is unknown at this time the amount of primary wire that was used for these efforts but as review of storm charges continue more details will be available. There were 320 reported wires down from the primary and secondary.

6-4. Number of transformers replaced.
Two.

6-5. Number of poles replaced.
Eleven.

6-6. Number of cross arms replaced.
Eleven.

6-7. Number of environmental impact events.
One.

6-8. Restoration costs (indicate if finalized or estimated to date).
Estimated to date is $1.15 million.

6-9. The peak number of customer without power by date and time, including an hourly spreadsheet of the number of customers without power per town throughout the duration of the storm.
The peak number of customers without power was 17,998, which occurred on March 8th between the hours of 0600 and 0700. During the peak of the storm approximately 85% of the southern New Hampshire territory was without power.

This storm is the second worst storm event for Liberty since the PUC began tracking major events. Total customers impacted by Storm Quinn in the Salem Area by Town are as follows: Atkinson (100% interrupted); Salem (81% interrupted); Derry (100% interrupted); Windham (99% interrupted); and Pelham (98% interrupted). 99% of all customers interrupted were restored by March 10th at 1900 hours or about 3 days after the storm began.

6-10. Detailed discussion and timeline of executed restoration and how the order of restoration compares with the 2017 Liberty Utilities Emergency Response Plan restoration prioritization.

Outage restoration was executed in accordance with Liberty's Electric Emergency Management Plan Appendix I - Restoration of Service. The Plan reads as follows:

Emergency work is done and service is restored generally in the order of priority below:

1. Live Wires and Extreme Hazards
2. Transmission
3. Substations
4. Critical Facilities
5. Life Support Customers
6. Primary Circuits
7. Secondary Circuits
8. Final Circuit Sweep
9. Permanent Repairs
10.

At the recent Municipal Meetings, the Company explained the restoration steps in Quinn as follows:

1. Life Safety – Top Priority is always the life safety of the public & employees
2. Electric Infrastructure: Sub-Transmission lines/substations: Transmission Lines in New Hampshire supplying Liberty Utility Substations are owned by National Grid.
3. Utility Defined Critical Facilities: Hospitals, police/fire stations, water supply, sewage treatment facilities (identified by Municipal Officials)
4. Circuit Backbones: Main line distribution circuits which feed lateral lines
5. Lateral Feeders: Large blocks of customers and/or whole neighborhoods, largest number of customers in the minimum amount of time
6. Transformers/Secondary Circuits
7. Individual House Services

6-11. Peak number of restoration crews (excluding damage assessors and tree crews) that were on the system at one time.

Liberty Utilities had:

- 9 Company restoration crews

- 8 on-property contractor crews
- 15 NAMAG crews

Contractor crews worked during day-time hours.
Company crews were split between day-time and night-time to provide 24 hour coverage.

6-12. A detailed discussion and associated timeline should be provided that describes the number of crews on the system prior to the storm, the number of crews planned for and needed for storm restoration efforts, all outgoing attempts to attain additional contractor or mutual aid crews, the number of crews offered by other contractors and utilities throughout the restoration event, and when crews were in New Hampshire and accepted by Liberty.
On Monday morning, the Incident Commander began securing Company and on-property contractor crews. Liberty Utilities had released contractor crews to assist a utility in another state during Winter Storm Riley. Liberty Utilities requested that they be returned ready to work by Wednesday morning. On Tuesday morning, the Company requested 10 line crews and 10 tree crews through NAMAG. However, none were available. On Tuesday afternoon, the Company informed the NHPUC Safety Division. On Thursday morning, the NHPUC Safety Division informed the Company that there were Canadian crews available from the NHEC. The Company contacted NHEC and NAMAG, but could not confirm this. On Thursday afternoon, the Company secured line crews from Evansville, Indiana, and Madison, Wisconsin, and tree crews from National Grid. A short time later, the Company secured crews from Vermont and canceled the Indiana and Wisconsin crews once we learned they were tree crews only. On Friday morning, the Company secured line crews from PSNH, Unitil, and NHEC. Initially, the Company turned down the Unitil and NHEC crews but reconsidered within the hour after the supervision, field coordination, and safety concerns were resolved. The Company informed the NHPUC Safety Division. The crew counts were provided in the filed reports. As it turned out, the crews provided by Unitil were the Canadian crews.

6-13. Detailed discussion of storm event level planning prior to the storm with respect to line resource requirements, existing in-house line resource deficiencies, and external line contractors required.
As with all potential electric events, before the initial call with the 60 invitees, there is a smaller call with Senior Management and Electric Operations. Appendix H of the Electric Emergency Plan contains a 3 Day Checklist. Items are discussed as necessary.

This smaller call or in-person meeting is generally held at the earliest notice of pending inclement weather. Because of the back to back to back storms Riley, Quinn, and Skylar, there were multiple opportunities to discuss available resources from an offering, holding, and requesting point of view.

6-14. Date, time, and location of the first customer who lost power associated with the storm and the date, time, and location of the last customer who had power restored associated with the storm.

First customers to lose power as a result of Storm Quinn occurred at 2141 hours on March 7 in the Zion Hill Area of Salem. The last customer to be restored occurred on March 11 at 1400 hours in the Castle Hill Rd Area of Windham.

6-15. A timeline of when and where the first-level damage assessment was initiated, entered into the OMS, and completed, including the quantity of resources utilized in the field, non-storm (day to day) roles of those field personnel assessing the damage, years of electric utility damage assessment experience; indicate which assessors had multiple roles within the Incident Command System.

Electric Operations personnel began damage assessment as soon as the first customers began to lose power on Wednesday evening. Those personnel with storm assignments in damage assessment began working early on Thursday morning. Both groups continued until Sunday morning.

The Damage Assessment responsibilities and procedures are detailed in Appendix J of the Electric Emergency Plan. Those personnel assigned to Damage Assessment can be found in the documents contained in *Appendix E* of this report.

6-16. The process followed by damage assessors and the Damage Assessor Coordinator during the Company's phase 1 assessment and any applications or equipment that were utilized to expedite the assessment of damage through the OMS, including the use of any mobile applications or other non-paper process.

The damage assessors followed the procedures detailed in Appendix J of the Electric Emergency Plan.

6-17. Detailed discussion, including times and duration, regarding any problems experienced with the company's OMS system, website outage map, website crew assignment, and outage reporting including attempts to repair problems during the event.

Initially, the amount of incoming customer calls caused the OMS system to predict upstream devices from actual affected devices. This resulted in higher predicted interruptions being reported in the website outage map. After updating the prediction mode in the system, Liberty was able to correct these reported amounts and the management of incidents in the OMS system improved.

During the latter stage of the storm some incidents had to be re-created to reflect accurate customer counts in the system. This caused the customer counts to increase temporarily in the outage map as these incidents were recreated and managed through completion. This issue took several hours to correct.

The outage management system had issues with reporting hazards (wires down; tree/limbs) due to an unknown bug in the system with unknown regions. This caused the wires down to be managed and tracked manually by the wires down team. This issue has since been resolved

6-18. Details of any discussions Liberty had with Town of Salem officials, such as Emergency Directors or First Responders, regarding the provision of electric power to mitigate the need for an emergency shelter to be opened.
Liberty Utilities opened its Municipal Contact Center on March 7 at noon. Fire Chief/EMD Paul Parisi and Assistant Chief Lawrence Best came to the Company's office twice a day throughout the restoration to discuss road closures and public safety.

On March 8, the Company reviewed the priority customers that had no power, as well as neighborhoods without power, and the estimated restoration times. Areas that were able to be restored through switching were identified, as were areas that would remain out overnight. Due to the large amount of outages in Salem and the estimated restoration times, the Town officials decided to open a shelter at the Ingram Senior Center on March 8 at 7 p.m. The Company kept the Town officials abreast of the areas that were restored on an ongoing basis.

The Company received 113 Priority 2 (Hindering Emergency Operations) calls during the Storm. Included were 14 "Wires Down" alerts through the iRestore App, which were submitted via local Fire and Police Personnel. During restoration of the storm, Liberty Utilities met regularly and worked closely with different chiefs of emergency personnel from different towns to discuss road closures and prioritization of restorations.

Note that on March 29, 2018, the Company hosted its annual Municipal Meetings as required by NH Puc 306.09. One agenda item was how the Company restores power to customers after a storm. The Company validated the Town of Salem's critical infrastructure listing. The NHPUC Safety Division declined the Company's invitation to attend so the Company forwarded a copy of the presentation to the Safety Division after the meeting.

6-19. Detailed discussion of Liberty's attempts to facilitate restoration with National Grid of the 23kV supply line originating at Pie Hill in Methuen and providing power to the Spicket River substation.
The loss of the National Grid 23kV-2376 Supply Line to Spicket River occurred on March 8 at approximately 3:50 a.m. Initially, National Grid indicated that the loss of supply was due to issues with the 115kV source at their Ward Hill substation. Liberty was not aware there was another issue, trees on primary, on the 23 kV Supply line until the morning of March 9 when a helicopter patrol was performed. Liberty immediately dispatched tree crews to address this issue. Liberty had performed a foot patrol of a portion of the 23 kV right of way and no tree hazards were identified at the time.

Throughout the duration of this outage, both Liberty Storm Room personnel and Liberty Control Room personnel were in contact, via phone, with National Grid regarding expected restoration of supply lines. Liberty Control Room personnel contacted both National Grid's Distribution and Transmission Control Rooms requesting updates. Liberty Storm Room Personnel contacted National Grid's Transmission Account Management Team regarding this outage and expected restoration.

6-20. The Commission's understanding is that the restoration of that substation feed would significantly restore the affected circuits out of the Spicket River substation and shorten outage durations in the North Main Street and Main Street areas accordingly.
The Commission is correct.

6-21. Discussion of restoration efforts coordinated with National Grid, including switching attempts employed by Liberty to restore power within Liberty's distribution system in lieu of National Grid's prolonged restoration efforts, with associated dates and times of each step of switching.
On March 8 at approximately 11:30 a.m., a portion of the 13L2 feeder was restored via the Salem Depot 9L3 feeder. On March 8 at approximately 4 p.m., the Spicket River 13L3 feeder was restored via the Olde Trolley 18L2 feeder. Restorations of the Spicket River feeders were delayed due to multiple lockouts in the adjacent areas which also prevented further restorations of these feeders.

6-22. Discussion should include a description of the Liberty circuits involved in potential switching, significant customers on those circuits, and the date and time when power was finally restored to the Spicket River substation.
See the response to Number 21 for a portion of this response. The 2376 Supply Line was restored on March 9 at approximately 2 p.m.

6-23. Include any communications with National Grid and all memoranda of understanding or efforts that have been memorialized to date regarding actions with National Grid to minimize outage durations associated with future interruptions of this line.
There are no known communications or memoranda.

6-24. List the names and roles of each employee (normal positions/titles), their roles within the Incident Command System, and the number of years of their experience within the role assigned.
The employees with roles within the ICS as of March 5, 2018, are listed on the documents in *Appendix E.* These documents are updated after each Event. The start and end dates of the assignments are not tracked. Day One for Liberty Utilities was July 3, 2012. Therefore, everyone on the list has less than six years' experience in their assignment as Liberty Utilities personnel. Some however bring experience from other utilities.

Additionally, there has been some turnover in the ICS assignments due to some individuals not meeting the Company expectations.

Nonetheless, as a result of drills, tabletop exercises, and actual events over the past six years, all assigned employees have an understanding of their roles.

See the table below:

	Drills	Table Top Exercises	Municipal Meetings	Actual Events
2018			March 28 – Lebanon March 29 - Salem	Jan 3-4: Snow (Grayson) Feb 6-7: Snow (Liam) Mar 2-3: Wind (Riley) Mar 7-11: Snow (Quinn) Mar 13-14: Snow (Skylar) Mar 20-22: Snow (Toby) Apr 4-5: Snow (Wilbur)
2017	August 30		April 11 - Concord	Jan 23-24: Wind/Snow Feb 8-9: Snow Feb 10-12: Snow (Orson) March 13-15: Snow (Stella) March 30-April1: Snow June 19: Thunderstorm Oct 30-31: Wind Dec 24-25: Ice
2016	May 24 (NAMAG) Aug 17 (NAMAG)	November 28 March 31 (NGRID-Transmission)	April 5 – Salem April 12 - Lebanon	January 20: Wind/Snow February 4-5: Snow February 15: Snow March 19: Wind/Snow April 3: Wind/Snow Sept 9: Wind/Rain October 6: Hurricane (Matthew) December 28-29: Snow
2015	December 9	December 15	March 27 - Lebanon March 30 - Londonderry	January 2-4: Ice/Snow January 26-27: Ice/Snow February 1-2: Ice/Snow February 13-15: Ice/Snow February 21-22: Ice/Snow October 2: Hurricane December 28-29: Ice/Snow
2014		July 23	March 4 - Lebanon March 5 - Salem	December 8-10: Ice/Snow November 23-28: Ice/Snow
2013			January 29 - Lebanon January 31 - Salem	February 8-10: Blizzard (Nemo)
2012	July 30			October 29-31: Hurricane Sandy

6-25. Identify those employees that hold multiple roles within the Incident Command System.

As shown on the documents in *Appendix E,* most ICS Positions have a Primary, Secondary, and Backup. In some limited situations, a Primary in one position may act as a Backup in another position. For example, once an individual completes their Onboarding Assignment, they may be able to act as a Field Guide.

6-26. Compare and contrast the differences in preparation that Liberty undertook for the prior Northeaster (Coastal Storm "Riley") that occurred on March 2 and 3, 2018, and Winter Storm "Quinn."

As shown in the table below, the storms were not comparable.

Nonetheless, the Company conducted its initial internal storm preparation call and followed the three documents similar to those in *Appendix E.* Once the storm's impact was known, the remaining calls were canceled.

Subject	Riley	Quinn
Dates	March 2 - 3	March 5 - 11
Weather Forecast	Hazardous Weather Outlook	Winter Storm Warning
Type Event	4	2
Planning Reports Issued	1	11
Internal Storm Calls	1	9
NAMAG Storm Calls	3	9

6-27. Include weather event indices used for both storms and note any factors that should be considered when reviewing each storm.

See the above table. From the National Weather Service:

Hazardous Weather Outlook

The Hazardous Weather Outlook will describe potential hazardous weather and hydrologic information of concern in Days 1 through 7.

The outlook contains two segments: One segment for the marine zones and adjacent land-based (i.e., coastal) zones and the other segment for the rest of the land-based zones. Each segment of the HWO will contain 3 sections: short term through Day 1, long term for Days 2-7, and spotter information.

Winter Storm Watch

A Winter Storm Watch is issued when there is the potential for significant and hazardous winter weather within 48 hours. It does not mean that significant and hazardous winter weather will occur...it only means it is *possible*.

Significant and hazardous winter weather is defined as a combination of:
1) 5 inches or more of snow/sleet within a 12-hour period **or** 7 inches or more of snow/sleet within a 24-hour period
AND/OR
2) Enough ice accumulation to cause damage to trees or powerlines.
AND/OR
3) a life threatening or damaging combination of snow and/or ice accumulation with wind.

The snow/sleet criteria for a Winter Storm Watch for the five westernmost counties (Allegany, Mineral, Grant, Pendleton, and Highland) is higher (6 inches or more within a 12-hour period; 8 inches or more within a 24-hour period).

6-28. Please include any other metrics normally included by Liberty within its internal self-assessments.

See Section 2 Overview of Storm.

Barron Ave Station - No 10 - OneLine

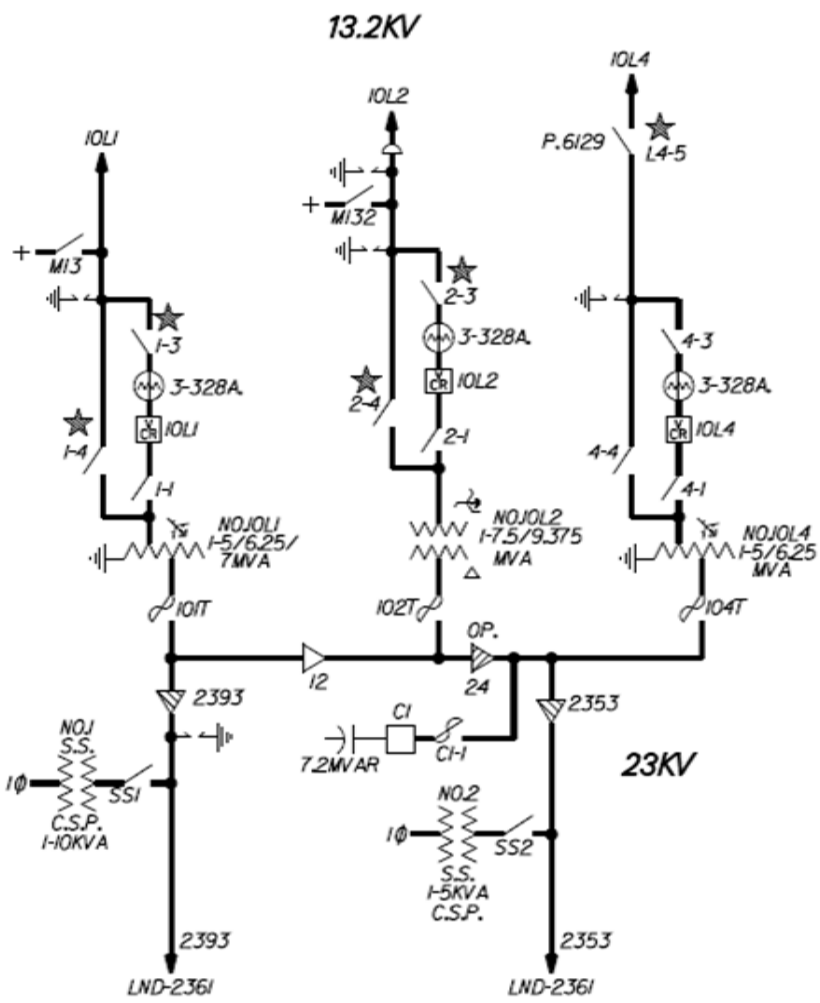

Major Equipment	Average Station Equipment Age 2019
23-13.2 kV Transformer	41
13.2 kv Recloser/Breaker	37
Regulator - Phase A	29
Regulator - Phase B	29
Regulator - Phase C	29

Comments
1 - 10L4 Recloser is at End of Life - No longer supported
2 - 10L4 Regulators are at End of Life - Contact wear, operations by phase -A over 421,000, B over 542,000, C over 559,000 - Live part height does not meet current mimimum requirements
3 - 23 kV Airbreak Switches are near End of Life - minimum age 50 years
4 - 10L1 Recloser Model has a higher than normal failure rate
5 - 10L1 Regulators are nearing End of Life - Contact wear - B phase over 270,000 operations, C phase over 195,000 operations
6 - 10L1 Transformer is 57 years old (as of 2006 - 2 of 31 have failed @ NGRID)
7 - 10L1 Transformer bushings have high power factor
8 - 10L4 Transformer is 48 years old (as of 2006 - 5 of 28 have failed @ NGRID)

Feeder	Major Equipment	Equipment Age	Nameplate Rating	Operation Counter 12/31/2019	Comments
10L1	23-13.2 kV Transformer	57	5/6.25/7 MVA		Transformer is 57 years old (as of 2006 - 2 of 31 have failed @ NGRID) Transformer bushing have high power factor
	13.2 kv Recloser	45	560 A, 15.5 kV	702	Recloser Model has a higher than normal failure rate
	Regulator - Phase A	31	7.62 kV, 328 A, 250 kVA	129,148	
	Regulator - Phase B	31	7.62 kV, 328 A, 250 kVA	272,517	Regulator nearing End of Life - Contact wear - B phase over 270,000 operations
	Regulator - Phase C	31	7.62 kV, 328 A, 250 kVA	198,762	Regulator nearing End of Life - Contact wear - C phase over 197,000 operations
10L2	23-13.2 kV Transformer	19	7.5/9.375 MVA		
	13.2 kv Recloser	16	560 A, 15.5 kV	110	
	Regulator - Phase A	18	7.62 kV, 328 A, 250 kVA	156,376	
	Regulator - Phase B	18	7.62 kV, 328 A, 250 kVA	98,573	
	Regulator - Phase C	18	7.62 kV, 328 A, 250 kVA	156,810	
10L4	23-13.2 kV Transformer	48	5/6.25 MVA		Transformer is 48 years old (as of 2006 - 5 of 28 have failed @ NGRID)
	13.2 kv Recloser	50	560 A, 15.5 kV	18	No Longer Supported - High Failure Rate
	Regulator - Phase A	38	7.62 kV, 328 A, 250 kVA	422,521	10L4 Regulator at End of Life - Contact wear, operations phase A over 421,000 - Live part height does not meet current mimimum requirements
	Regulator - Phase B	38	7.62 kV, 328 A, 250 kVA	582,024	10L4 Regulator at End of Life - Contact wear, operations phase B over 542,000 - Live part height does not meet current mimimum requirements
	Regulator - Phase C	38	7.62 kV, 328 A, 250 kVA	560,657	10L4 Regulator at End of Life - Contact wear, operations phase C over 559,000 - Live part height does not meet current mimimum requirements

Salem Depot - No 9 - OneLine

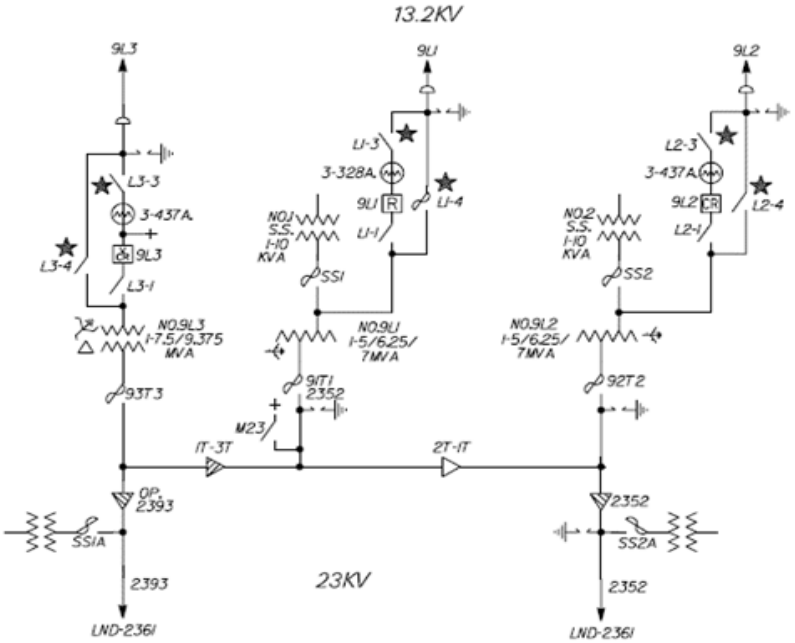

Major Equipment	Average Station Equipment Age 2019
23-13.2 kV Transformer	49
13.2 kv Recloser/Breaker	41
Regulator - Phase A	25
Regulator - Phase B	26
Regulator - Phase C	19

Comments
1 - 9L1 Transformer - 51 years old
2 - 9L1 Oil Circuit Breaker - 68 years old
3 - 9L2 Recloser - 43 years old
4 - 9L2 Phase C Regulator Needs internal motor capacitor repair - untanking required
5 - 9L3 Transformer H3 bushing needs to be replaced due to poor power factor, Oil Temperature gauge needs to be replaced - Transformer 30 years old

Feeder	Major Equipment	Equipment Age	Nameplate Rating	Operation Counter 12/31/19	Comments
9L1	23-13.2 kV Transformer	51	5/6.25/7 MVA		
	13.2 kv Recloser/BKR	68	600 A, 14.4 kV	995	Oil Circuit Breaker Electromechanical relay
	Regulator - Phase A	10	7.62 kV, 437 A, 333 kVA	218,064	
	Regulator - Phase B	10	7.62 kV, 437 A, 333 kVA	12,813	
	Regulator - Phase C	10	7.62 kV, 437 A, 333 kVA	124,787	
9L2	23-13.2 kV Transformer	65	5/6.25/7 MVA		
	13.2 kv Breaker	43	800 A, 14.4 kV	737	
	Regulator - Phase A	19	7.62 kV, 437 A, 333 kVA	102,758	
	Regulator - Phase B	22	7.62 kV, 437 A, 333 kVA	149,906	
	Regulator - Phase C	16	7.62 kV, 437 A, 333 kVA	129,485	Needs internal motor capacitor repair - untanking required
9L3	23-13.2 kV Transformer	30	7.5/9.375 MVA		Transformer H3 bushing needs to be replaced due to poor power factor, Oil Temperature gauge needs to be replaced
	13.2 kv Recloser	13	800 A, 15.5 kV	48	
	Regulator - Phase A	47	7.62 kV, 437 A, 333 kVA	198,321	
	Regulator - Phase B	47	7.62 kV, 437 A, 333 kVA	227,398	
	Regulator - Phase C	32	7.62 kV, 437 A, 333 kVA	207,229	

THIS PAGE INTENTIONALLY LEFT BLANK

2022	DISTRIBUTION LINE						DISTRIBUTION SUB			SUPPLY LINE				
AREA	FEEDER NORMAL LOADING 75-100%	FEEDER NORMAL LOADING > 100%	FEEDER CONTINGENCY LOADING 16MWHR	FEEDER CUSTOMERS ABOVE 2500	500 CUSTOMERS OR 2,000KVA BETWEEN DISC	FEEDER HAS LESS THAN 3 FEEDER TIES	TRANSFORMER NORMAL LOADING 75-100%	TRANSFORMER NORMAL LOADING > 100%	TRANSFORMER CONTINGENCY LOADING 2.5MW/60MWHR	SUPPLY LINE NORMAL LOADING 90-100%	SUPPLY LINE NORMAL LOADING > 100%	SUPPLY LINE CONTINGENCY LOADING 1.5MW/36MWHR	VIOLATION MITIGATION	IMPACT FROM CHANGES TO PLANNING CRITERIA
BARRON AVENUE 10L1	NONE	NONE	NONE	NONE	NONE	YES	NONE	NONE	NONE	N/A	N/A	N/A	**Asset retirement** - Install Golden Rock 19L8 and 19L6 feeders.	None
BARRON AVENUE 10L2	NONE	NONE	NONE	NONE	NONE	NONE	NONE	NONE	NONE	N/A	N/A	N/A	**Asset retirement** - Install Golden Rock 19L8 and 19L6 feeders.	None
BARRON AVENUE 10L4	NONE	NONE	NONE	NONE	NONE	YES	NONE	NONE	NONE	N/A	N/A	N/A	**Asset retirement** - Install Golden Rock 19L8 and 19L6 feeders.	None
OLDE TROLLEY 18L1	NONE	NONE	NONE	NONE	NONE	YES	NONE	NONE	NONE	N/A	N/A	N/A	None	None
OLDE TROLLEY 18L2	YES	NONE	YES	NONE	NONE	NONE	YES	NONE	NONE	N/A	N/A	N/A	**75-100% SN** - Install new DA switchgear at Mall and transfer Switchgear B to 18L1. (2019 DA program) **16MWhr** - Install new Golden Rock 19L6/19L4 feeders	None. Distribution Automation Project will install automated switchgear which will also reduce loading to within 75% of SN. 16MWhr violation applies to original criteria.
OLDE TROLLEY 18L3	YES	NONE	YES	NONE	NONE	NONE	YES	NONE	NONE	N/A	N/A	N/A	**75-100% SN -** Transfer portion of Industrial Way load to 14L4 **16MWhr** - Install Rockingham 21L7/21L8 feeders	None. Will perform switching to reduce loading within 75% of SN. 16MWhr violation applies to original criteria.
OLDE TROLLEY 18L4	NONE	YES	YES	NONE	NONE	YES	NONE	YES	NONE	N/A	N/A	N/A	**> 100% SN** - Install Rockingham feeders 21L7/21L8 feeders to supply Tuscan Dev **16 MWhr** - Install Rockingham 21L7/21L8 feeders	None - Violations apply to original criteria
PELHAM 14L1	NONE	NONE	YES	NONE	NONE	YES	NONE	NONE	NONE	N/A	N/A	N/A	**16 MWhr** - Install new Pelham 14L5 feeder	None - Violations apply to original criteria
PELHAM 14L2	YES	NONE	YES	NONE	NONE	NONE	NONE	NONE	NONE	N/A	N/A	N/A	**75-100% SN** - Transfer portion of Sherburne Rd to 14L1. **16 MWhr** - Install new Pelham 14L5 feeder	None. Will perform switching to reduce loading within 75% of SN. 16MWhr violation applies to original criteria.
PELHAM 14L3	NONE	NONE	YES	NONE	NONE	NONE	NONE	NONE	NONE	N/A	N/A	N/A	**16 MWhr** - Install Rockingham 21L7/21L8.	None - Violation applies to original criteria
PELHAM 14L4	NONE	YES	YES	NONE	NONE	NONE	NONE	NONE	NONE	N/A	N/A	N/A	**> 100% SN** - Install Rockingham feeders 21L7/21L8 feeders to supply Tuscan Dev **16 MWhr** - Install Rockingham 21L7/21L8 feeders	None - Violations apply to original criteria
PELHAM 14L5	N/A	N/A	N/A	N/A	N/A	N/A	N/A	N/A	N/A	N/A	N/A	N/A	N/A	N/A
SALEM DEPOT 9L1	NONE	YES	YES	NONE	NONE	NONE	NONE	YES	YES	N/A	N/A	N/A	**> 100% SN** - Install one Rockingham sub 21L1 feeder **16 MWhr** - Install one Golden Rock 19L4 feeder **Asset retirement** - Install one Rockingham sub 21L1 feeder	None - Violations apply to original criteria
SALEM DEPOT 9L2	YES	NONE	YES	NONE	NONE	YES	YES	NONE	YES	N/A	N/A	N/A	**75 - 100% SN** - Transfer portion of Main St to 9L3. **16 MWhr** - Install one Rockingham 21L6 feeder **Asset retirement** - Install one Rockingham sub 21L6 feeder	None. Will perform switching to reduce loading within 75% of SN if needed. 16MWhr violation applies to original criteria.
SALEM DEPOT 9L3	NONE	NONE	YES	NONE	YES	NONE	NONE	NONE	NONE	N/A	N/A	N/A	**16 MWhr** - Install Rockingham 21L5 feeder. **Asset Retirement** - Install Rockingham 21L5 feeder	None - Violation applies to original criteria
SPICKET RIVER 13L1	NONE	NONE	YES	NONE	NONE	YES	NONE	NONE	NONE	N/A	N/A	N/A	**16 MWhr** - Install one Golden Rock 19L4 feeder.	None - Violation applies to original criteria
SPICKET RIVER 13L2	NONE	NONE	YES	NONE	YES	NONE	NONE	NONE	NONE	N/A	N/A	N/A	**16 MWhr** - Install one Golden Rock 19L4 feeder.	None - Violation applies to original criteria
SPICKET RIVER 13L3	YES	YES	YES	NONE	YES	NONE	YES	NONE	NONE	N/A	N/A	N/A	**> 100% SN** - Install one Golden Rock 19L4 feeder **16 MWhr** - Install one Golden Rock 19L4 feeder	None - Violations apply to original criteria
GOLDEN ROCK 2393	N/A	N/A	N/A	N/A	N/A	N/A	N/A	N/A	N/A	NONE	NONE	YES	**363 MWhr** - Expand Golden Rock Substation and Install Rockingham Substation	None - Violation applies to original criteria
GOLDEN ROCK 2352	N/A	N/A	N/A	N/A	N/A	N/A	N/A	N/A	N/A	NONE	NONE	YES	**93 MWhr** - Expand Golden Rock Substation and Install Rockingham Substation	Violation due to change in planning criteria - supply line contingency loading
SPICKET RIVER 2376	N/A	N/A	N/A	N/A	N/A	N/A	N/A	N/A	N/A	NONE	NONE	YES	**307 MWhr** - Install one Golden Rock 19L4 feeder Install Rockingham Substation	None - Violation applies to original criteria
GOLDEN ROCK T1	N/A	N/A	N/A	N/A	N/A	N/A	YES	N/A	YES	N/A	N/A	N/A	**75-100% SN -** Expand Golden Rock Substation **613 MWhr** - Expand Golden Rock Substation and Install Rockingham Substation	Violation due to change in planning criteria - 75% SN None - Violation applies to original criteria
GOLDEN ROCK 2353	N/A	N/A	N/A	N/A	N/A	N/A	N/A	N/A	N/A	NONE	NONE	YES	**306 MWhr** - Expand Golden Rock Substation and Install Rockingham Substation	None - Violation applies to original criteria
GOLDEN ROCK 2376	N/A	N/A	N/A	N/A	N/A	N/A	N/A	N/A	N/A	NONE	NONE	YES	**306 MWhr** - Expand Golden Rock Substation and Install Rockingham Substation	None - Violation applies to original criteria
GOLDEN ROCK G133	N/A	N/A	N/A	N/A	N/A	N/A	N/A	N/A	N/A	N/A	N/A	YES	**613 Mwhr** - Expand Golden Rock Substation and Install Rockingham Substation	None - Violation applies to original criteria

CHAIRMAN
Martin P. Honigberg

COMMISSIONERS
Kathryn M. Bailey
Michael S. Giaimo

EXECUTIVE DIRECTOR
Debra A. Howland

THE STATE OF NEW HAMPSHIRE

PUBLIC UTILITIES COMMISSION
21 S. Fruit Street, Suite 10
Concord, N.H. 03301-2429

TDD Access: Relay NH
1-800-735-2964

Tel. (603) 271-2431

FAX (603) 271-3878

Website:
www.puc.nh.gov

April 6, 2018

Craig Jennings
Vice President of Operations and Engineering
Liberty Utilities
15 Buttrick Road
Londonderry, NH 03053

Re: After Action Report – Winter Storm Quinn (March 7-11, 2018)

Dear Mr. Jennings:

On March 7 through 11, 2018, the impacts of Winter Storm Quinn significantly affected the Liberty Utilities electric distribution system, causing large amount of outages to the company's customers as well as similar disruption to other electricity supply providers within New Hampshire.

Puc 302.24 defines "wide-scale storms" as those affecting greater than 10% or more of a utility's customers and requiring restoration efforts lasting greater than 24 hours. Winter Storm Quinn is considered a wide-scale storm. The Commission recognizes that the March 7-11 storm was the second worst storm for Liberty Utilities in New Hampshire in terms of customer meters without power. The Commission also notes that Liberty's restoration efforts were 25% longer in duration than those of other utilities, and that the Town of Salem was the only community in New Hampshire that needed to open a shelter during the event due to the cold temperatures experienced during the extended power outage. In order to improve the Company's future restoration efforts, the Commission has determined that the completion of a self-assessment would be useful to the Commission as well as the Company. Accordingly, Liberty Utilities is directed to submit a comprehensive, written after action and self-assessment report by May 7, 2018.

At a minimum, the following information must be contained within the report:

- Number of services replaced.
- Amount of secondary wire replaced (in feet).
- Amount of primary wire (in feet, indicating size and 1ph, 2ph, 3ph, mainline).

- Number of transformers replaced.
- Number of poles replaced.
- Number of cross arms replaced.
- Number of environmental impact events.
- Restoration costs (indicate if finalized or estimated to date).
- The peak number of customer without power by date and time, including an hourly spreadsheet of the number of customers without power per town throughout the duration of the storm.
- Detailed discussion and timeline of executed restoration and how the order of restoration compares with the 2017 Liberty Utilities Emergency Response Plan restoration prioritization.
- Peak number of restoration crews (excluding damage assessors and tree crews) that were on the system at one time.
- A detailed discussion and associated timeline should be provided that describes the number of crews on the system prior to the storm, the number of crews planned for and needed for storm restoration efforts, all outgoing attempts to attain additional contractor or mutual aid crews, the number of crews offered by other contractors and utilities throughout the restoration event, and when crews were in New Hampshire and accepted by Liberty.
- Detailed discussion of storm event level planning prior to the storm with respect to line resource requirements, existing in-house line resource deficiencies, and external line contractors required.
- Date, time, and location of the first customer who lost power associated with the storm and the date, time, and location of the last customer who had power restored associated with the storm.
- A timeline of when and where the first-level damage assessment was initiated, entered into the OMS, and completed, including the quantity of resources utilized in the field, non-storm (day to day) roles of those field personnel assessing the damage, years of electric utility damage assessment experience; indicate which assessors had multiple roles within the Incident Command System.

- The process followed by damage assessors and the Damage Assessor Coordinator during the Company's phase 1 assessment and any applications or equipment that were utilized to expedite the assessment of damage through the OMS, including the use of any mobile applications or other non-paper process.

- Detailed discussion, including times and duration, regarding any problems experienced with the company's OMS system, website outage map, website crew assignment, and outage reporting including attempts to repair problems during the event.

- Details of any discussions Liberty had with Town of Salem officials, such as Emergency Directors or First Responders, regarding the provision of electric power to mitigate the need for an emergency shelter to be opened.

- Detailed discussion of Liberty's attempts to facilitate restoration with National Grid of the 23kV supply line originating at Pie Hill in Methuen and providing power to the Spicket River substation.

- The Commission's understanding is that the restoration of that substation feed would significantly restore the affected circuits out of the Spicket River substation and shorten outage durations in the North Main Street and Main Street areas accordingly.
- Discussion of restoration efforts coordinated with National Grid, including switching attempts employed by Liberty to restore power within Liberty's distribution system in lieu of National Grid's prolonged restoration efforts, with associated dates and times of each step of switching.

- Discussion should include a description of the Liberty circuits involved in potential switching, significant customers on those circuits, and the date and time when power was finally restored to the Spicket River substation.

- Include any communications with National Grid and all memoranda of understanding or efforts that have been memorialized to date regarding actions with National Grid to minimize outage durations associated with future interruptions of this line.

- List the names and roles of each employee (normal positions/titles), their roles within the Incident Command System, and the number of years of their experience within the role assigned.

- Identify those employees that hold multiple roles within the Incident Command System.

- Compare and contrast the differences in preparation that Liberty undertook for the prior Northeaster (Coastal Storm "Riley") that occurred on March 2 and 3, 2018, and Winter Storm "Quinn."

- Include weather event indices used for both storms and note any factors that should be considered when reviewing each storm.

- Please include any other metrics normally included by Liberty within its internal self-assessments.

Please file the requested report to my attention by no later than May 7, 2018.

Sincerely,

Debra A. Howland
Executive Director

Winter Storm Quinn – March 2018
After Action Report for Liberty Utilities

Prepared on: May 7, 2018

Prepared by: Leo Cody
Manager
Compliance, Quality and Emergency Management

Submitted to: Debra A. Howland
Executive Director
New Hampshire Public Utilities Commission

THIS PAGE INTENTIONALLY LEFT BLANK

Table of Contents

1. Purpose

2. Overview of Storm

3. After Action Review
   - 3.1 Pre-Storm Planning
     - Weather Forecasting
     - Readiness Plans and Process
     - Logistics
     - Crews
     - Support Services
   - 3.2 Communication
     - Internal
     - External
   - 3.3 Restoration Response
     - Resource Management
     - Damage Assessment and Wires Down
     - Safety

4. Summary

5. Appendices
   - *A.* Weather Sentry DTN Energy Event Index Tables
   - *B.* Liberty Utilities Daily Weather Summaries
   - *C.* Liberty Utilities Storm Planning Reports
   - *D.* NH Puce E-33 Forms
   - *E.* Storm Call Documents
   - *F.* All Events
   - *G.* Timeline of Events

6. NHPUC Information Request

Winter Storm Quinn – March 7, 2018

Winter Storm Quinn – March 7, 2018

Winter Storm Quinn – March 7, 2018

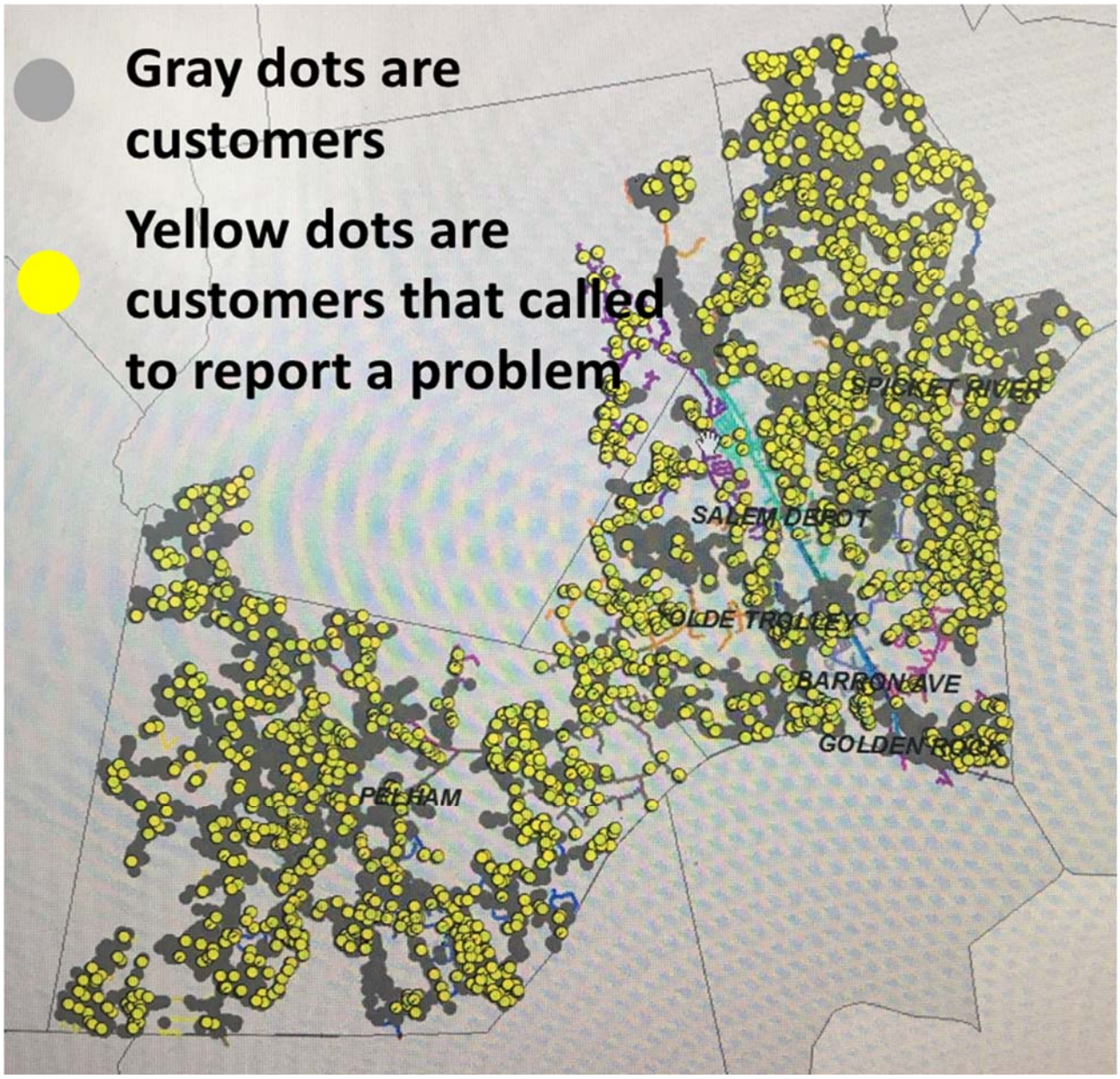

1. Purpose

In the aftermath of the December 2008 Ice Storm, the New Hampshire Public Utilities Commission ("NHPUC") undertook a review of utility emergency preparedness and response. The NHPUC issued its Final Report on December 3, 2009.

Appendix A to the Final Report, entitled "Action Items Checklist," has the following going forward requirement under Item 5, "Emergency Response Actions."

> 5.2 Each affected utility shall file self-assessments with the Commission within 60 days following any State-declared emergency event that implicates utility services. Forensic analyses of weather data should be a part of those self-assessments.

Liberty Utilities (Granite State Electric) Corp. d/b/a Liberty Utilities ("Liberty Utilities" or "the Company") prepares this report at the request of the NHPUC Safety Division. By a voice message on March 16, 2018, the NHPUC Safety Division requested that the Company file an after action report within 60 days of the completion of restorations even though there was no State-declared emergency.

Additionally, Liberty Utilities was informed by a letter dated April 6, 2018, that an After Action Report was due on May 7, 2018. The letter stated that Winter Storm Quinn was considered a wide-scale storm. The NHPUC Safety Division did not notify the Company during the event that Winter Storm Quinn was considered a wide-scale emergency and thus the reports under Puc 307.08 were not required. However, the Company forwarded those reports to the Safety Division on its own.

2. Overview of Storm

Liberty Utilities is responsible for providing uninterrupted electric service to approximately 43,000 customers in 21 cities and towns spread out over two geographic regions known as the Lebanon and Salem areas.

The two regions generally operate as independent operations areas on opposite sides of the state with no electric system interconnections between the two regions. Each region has unique weather patterns and they operate individually during most emergencies.

Over a five day period beginning in the evening of March 7, 2018, and ending in the afternoon of March 11, 2018, Liberty Utilities experienced customer outages in both regions. The first customer outages were reported at approximately 2100 hours on Wednesday, March 11. At the peak of the storm (March 8 at 0700 hours), there were approximately 17,998 customer outages (or 41% of all customers). The majority of damage was from heavy wet snow on trees and tree limbs contacting and/or bringing down poles and wires. This event interrupted service to 20,168 customers over the five day period and impacted ten towns in Liberty Utilities' service territory.

On average, any customer who experienced an outage during this event was out of service for 1,345 minutes (22 hours). Also, 99% of all customers interrupted were restored within 3 days of the beginning of the storm. Storm restoration was completed on Sunday, March 11 at approximately 1400 hours. Clean up from the storm and customer reconnections lasted several days after the conclusion of the storm.

The table below contains a summary of the interruptions by town.

Town	Customers Served	Customers Interrupted	% Interrupted
Atkinson	12	12	100%
Derry	119	119	100%
Pelham	5,673	5,564	98%
Salem	14,529	11,699	81%
Windham	1,169	1,152	99%
Acworth	204	204	100%
Alstead	1,105	927	84%
Langdon	283	74	26%
Marlow	7	7	100%
Walpole	2,102	4	0%

This event was the second worst event for Liberty Utilities since the NHPUC Safety Division began tracking such events.

Liberty Utilities Top Storm Events			
Event Name	**December 11-24, 2008 Ice Storm**	**March 7-11, 2018 Quinn**	**Oct 29 - Nov 4, 2011 Snow Storm**
# of Customers Affected	24,164	20,168	17,000
% of Customers Affected	63%	46%	41%
Duration of Restoration (hours)	168	91	108

Below is a summary of the reliability indices for this storm period.

	Events	CI	CMI	CS	SAIDI	SAIFI	CAIDI
March 7-11, 2018	153	20,168	27,132,867	44,043	616	0.46	1,345

Legend:

Event - An interruption occurring on either primary or secondary lines
CI - Customers Interrupted
CMI - Customer Minutes Interrupted
CS - Customers Served
SAIDI - System Average Interruption Duration Index
SAIFI - System Average Interruption Frequency Index
CAIDI - Customer Average Interruption Duration Index

Notes:
CMI – Customer Minutes Interrupted (Restoration time in minutes times total number of customers interrupted)
SAIDI – System Average Interruption Duration Index (Measures the total duration of an interruption for the average customer during the storm period)
SAIFI – System Average Interruption Frequency Index (The average number of times that a system customer experiences an outage during the storm period)
CAIDI – Customer Average Interruption Duration Index (Once an outage occurs the average time to restore service is found from the CAIDI)

The State of New Hampshire opened its Emergency Operating Center but did not declare an emergency event during this time period.

Under Puc 307.08 (c):

> In the event that commission staff anticipates the occurrence of a wide-scale emergency, staff shall notify the utilities and the utilities shall file crew reports prior to the onset of the wide-scale emergency. Event names shall be determined by the commission and made known to each of the utilities required to report.

The NHPUC Staff did not notify the utilities of a wide-scale emergency, no wide-scale emergency was anticipated for the two Liberty Utilities regions, and no event name was designated by the NHPUC.

3. After Action Review

3.1 Pre-Storm Planning

- **Weather Forecasting**

On Monday morning, March 5, 2018, Liberty Utilities was finishing its restoration efforts from Winter Storm Riley and immediately transitioned into storm preparation for Winter Storm Quinn.

On Monday afternoon, an internal Weather Alert was issued:
SALEM/LEBANON/CHARLESTOWN, NH: Light snow becomes possible by mid to late morning on Wednesday. The steadier snows hold off until mid to late afternoon on Wednesday with moderate to heavy snows expected by Wednesday evening and into Thursday morning before winding down the rest of Thursday across the entire region. Most of this will be normal to wet snow, all wet snow into Salem and Salem also has a chance to mix with some rain later

Wednesday and Wednesday evening which could hold down snow amounts some. Currently thinking a widespread 6-12 inches is expected across most of New Hampshire with isolated higher amounts, but likely reserved for higher elevations and interior areas away from the coast/river valleys. Wind gusts of 25-35 mph will also be possible Wednesday night and into Thursday.

On Tuesday morning, March 6, 2018, a Winter Storm Warning was issued:
*The National Weather Service has issued a Hazardous **Weather Outlook** and a **Winter Storm Warning** until 13:00 on Thursday 3/8/18. Telvent is predicting a **Level 4 Snow** event in Salem and Manchester and a **Level 3 Snow** event in Lebanon and Charlestown. Periods of light snow will develop between 7-10 am Wednesday. Periods of moderate/heavy snow are expected between 6 pm Wednesday until 10 am Thursday. Accumulations will range between 12-18" in Salem and Manchester and 8-14" in Lebanon and Charlestown. Snow consistency is expected to start out normal then quickly change to wet. Winds could peak around 25-35 mph Wednesday evening into Thursday morning. No ice accretion is being predicted for this storm.*

Appendix A contains the Weather Sentry DTN Energy Event Index Tables for the period March 5–March 11, 2018.

Appendix B contains the Liberty Utilities Daily Weather Summaries for the period March 5–March 11, 2018.

- **Readiness Plans and Process**

Liberty Utilities followed its Electric Emergency Management Plan dated June 1, 2017. In 2016, this Plan was revised and updated to incorporate the NHPUC's Thanksgiving Storm 2014 After Action Report Requirements.

Prior to the storm, a Type 2 Event (as defined in the Emergency Management Plan) was forecasted to commence on Tuesday, March 6, 2018. Type 2 is considered a Major Impact Event with Comprehensive Support. This event is typically characterized as having up to 200 Locations of Trouble and up to 8,400 customer outages.

The Company notified internal personnel and implemented internal storm assignments that were appropriate for a Type 2 Event.

Under Puc 306.09, Company Emergency Response Plans shall incorporate projected Event levels consistent with Table 306-1.

Table 306-1			
Utility	**ERP Event Level**	**% Customers Out**	**Outage Duration (Hrs.)**
	5	≤2	<12
	4	>2≤5	0-24
	3	>5 ≤10	24-48
	2	>10≤20	48-144
	1	>20	48-240

The Liberty Utilities Electric Emergency Management Plan is consistent with the Puc Rules for Electric Service.

Note that the Company Event Levels and the NHPUC Event Levels differ from the Weather Sentry Levels (shown below).

Energy Event Index Definition

No Leaves (Nov 1 - Mar 31)

EEI	Wind Speed	Wind/Gust	Snow	Ice
1	< 40 mph	< 45 mph	< 6 in.	< 1/10 in.
2	>= 40 mph	>= 45 mph	>= 6 in.	>= 1/10 in.
3	>= 50 mph	>= 55 mph	>= 8 in.	>= 3/8 in.
4	>= 60 mph	>= 70 mph	>= 12 in.	>= 1/2 in.
5	>= 70 mph	>= 85 mph	>= 24 in.	>= 1 in.

Confidence Level	
Low	<30% chance the most likely index level remains at that level through the event
Medium	30-60% chance the most likely index level remains at that level through the event
High	>=60% chance the most likely index level remains at that level through the event

*Note: Confidence is NOT a measure of probability of an event occurring; if you have an accompanying forecast discussion that information can be found there. Confidence is a measure of how likely the forecasted index level will stay at that level from now through the event, or a way to measure the potential for variability in the forecast. So for example, if it is Monday and there are level 2 gusts forecasted on Wednesday with high confidence, and if your customizable threshold for high confidence is set at 60%, it means the following: There is a >=60% chance the most likely forecasted gusts will remain at level 2 with all updates from now through Wednesday.

On Tuesday afternoon, the Company participated in NAMAG (North Atlantic Mutual Assistance Group) Call #9 for Winter Storm Riley and held its own internal Call #1 for Winter Storm Quinn. Over the next five days, the Company would participate in seven additional NAMAG calls and hold eight additional internal calls. On the sixth day, the Company began preparations for Winter Storm Skylar.

On Tuesday afternoon, March 6, 2018, the Company conducted its first internal storm call. Typically, approximately 50 – 60 employees with storm assignments are invited to participate in such calls. Attached to the meeting invitation are the following documents:

1. Meeting Agenda – Prior to Event dated March 5, 2018
2. Electric Event Organization dated March 5, 2018
3. Electric Operations Emergency Response Assignments dated March 5, 2018

These three documents are included in *Appendix E*. The Manager of Emergency Management walked through the meeting agenda.

On the initial call, the Company discussed:

- **Logistics**

Electric Operations evaluated the material levels needed for a Type 2 Event and ensured that storm kits and vehicles included the necessary items.

The hotels and pre-staging locations were identified and secured. Rental vehicles were acquired for damage assessment.

- **Crews**

Electric Operations determined the number of internal company and on-property contractor line and tree crews that were available for Liberty Utilities in each of the regions. The Company determined that it would request additional NAMAG crews. However, the Company knew that none were available at that time as a result of its participation in NAMAG calls.

- **Support Services**

The Company determined that, as a Type 2 Event, the municipal rooms, storm rooms, wires down rooms, and damage assessment rooms would open.

Also, Emergency Dispatch, Electric Control, and the Call Center brought in additional personnel to handle the anticipated additional work load.

3.2 Communication

- **Internal**

During blue sky days, as part of its daily activity, every 4 hours, Dispatch and Control sends out weather forecasts to appropriate internal personnel in New Hampshire.

During anticipated storm events, Dispatch and Control also sends out storm planning reports. Additionally, Emergency Management conducts storm planning conference calls that follow a Meeting Agenda - During Event (see *Appendix E*). There are other smaller group meetings and calls within Electric Operations and those with Storm Assignments to Electric Operations as needed.

These practices were followed starting on Tuesday, March 6 through Sunday, March 11.

Appendix C contains the Storm Planning Reports issued by Dispatch and Control. Copies were voluntarily forwarded to the NHPUC Safety Division and to nheoc@dos.nh.gov.

- **External**

While under no requirement to do so, the Company forwarded by email copies of Puc Form E-33 Distribution Crew Report to the NHPUC Safety Division. Likewise, the Company and the NHPUC Safety Division engaged in several email exchanges and phone calls during this time period.

Appendix D contains corrected copies of the Puc E-33 Forms.

The Company is not aware of any scheduled calls initiated by state government during the restoration period.

The New Hampshire Department of Safety did not issue a Declaration of Emergency. However, two press releases were issued and the NH Emergency Operations Center was opened. Also, the New Hampshire Cybersecurity Functional Exercise scheduled for March 8, 2018, was postponed.

The Company opened its Municipal Contact Center on Wednesday, March 7, at 1200 hours. The Center remained opened until Sunday, March 11 at 1900 hours. The Company communicated directly with municipal officials and first responders during this time period. Their concerns, in addition to customer outages, were the blocked roads due to tree damage and wires down.

Liberty Utilities significantly ramped up communications with customers using its social media pages (Facebook and Twitter). The Company pushed out regular general updates to all followers every 2-3 hours and attempted to respond to all customer inquiries during normal business hours. After hours, the Company reduced the individual customer responses to just emergency situations. The Company posted photos of damage so customers could see the magnitude of the damage. Liberty Utilities also utilized its website and provided updates every 3-4 hours. Customer Outage Maps were available to the public throughout the storm via the Company web-site. This was not the first time that the Company made such extensive use of social media to communicate with the public. The response by customers was positive. Customers were made aware of the Company's restoration efforts and knew that their particular situation was not being ignored.

3.3 Restoration Process

- **Resource Management**

On Monday morning, March 5, the Incident Commander began securing Company and on-property line and tree crews. Liberty Utilities had released contractor crews to work out of state to assist another utility during Winter Storm Riley. The Company requested that they return to New Hampshire by Wednesday morning ready to work.

On Tuesday morning, March 6, the Company requested ten distribution line crews and ten tree crews from the NAMAG. At that time, there were outstanding requests for approximately 1,210 distribution line crews and 22 tree crews by other NAMAG members. These outstanding requests were the result of back to back to back storms impacting the same operators in a short time period. The Company knew on Tuesday that we would not be able to pre-stage NAMAG crews.

By Wednesday evening, March 7, the Company was beginning to experience a Type 2 Event – Major Impact Event (Comprehensive Support). Such events are characterized as having up to 200 Locations of Trouble and up to 8,400 customer outages. As the Company received more information that evening, it monitored restoration efforts and dispatched the line and tree crews when and where it was safe to do so.

How and when Liberty Utilities utilized its crews is reflected in the Puc Form E-33 reports. As previously stated, these were voluntarily provided to the NHPUC Safety Division throughout the storm. An error was discovered in some reports and corrected ones are in *Appendix D.* The reports include the NAMAG crews secured on Friday, March 9.

- **Damage Assessment and Wires Down**

Electric Operations, with assistance from Gas Operations and Engineering personnel, performed all damage assessment and wires down requests. This effort began as soon as the first no power calls came in on Wednesday evening.

Additionally, the Company introduced the iRestore First Responder Smartphone App to the local fire and police departments in its electric service territories during the month of February 2018. The App enables first responders to easily send geo-tagged photos of damaged equipment directly to the Liberty Utilities. The first successful use of the App occurred during Storm Quinn. Police and Fire Dispatch Centers are still required to call Liberty Utilities Dispatch Center to report damaged equipment or emergencies. The use of the App is not limited to storms.

- **Safety**

Liberty Utilities did not experience any safety related incidents during the storm. Each morning, a written storm safety briefing was issued to all Liberty Utilities personnel with a storm assignment and to the mutual aid contractors working in the service territory.

During the five day event, there were:

- 150 employees working,
- 100 contractors working,
- 11,000 hours worked, and
- 0 safety incidents

concerning employees, contractors, customers, first responders, or the public.

4. Summary

The Settlement Agreement in Docket No. DG 06-107, approved by Order No. 24,777, requires Granite State to establish a storm reserve fund. The fund is used to pay for all of the operations and maintenance costs incurred by Granite State as the result of major storms. A major storm is defined as a severe weather event or events causing 30 concurrent troubles (i.e., interruption events occurring on either primary or secondary lines) and 15 percent of customers interrupted or 45 concurrent troubles.

The Settlement Agreement in Docket No. DE 13-063, approved by Order No. 25,738, allows Liberty Utilities to charge costs to the storm reserve if the weather forecast shows an EII Level of 3 or greater with a high probability of occurrence. The costs include pre-staging of crews, standby arrangements with external contractors, incremental compensation of employees, and other costs that may be incurred to prepare for a qualifying major storm.

There were 153 interruption events during the 91-hour period impacting 20,168 customers (or 46%). Therefore, the storm met the criteria for a major storm designation, and the costs are being charged to the storm reserve fund.

The Company has created a Storm Timeline of Events for the storm, which is contained in *Appendix G.*

Appendix *F* contains a listing of all of the customer interruptions or Events.

5. Appendices

A. Weather Sentry DTN Energy Event Index Tables
B. Liberty Utilities Daily Weather Summaries
C. Liberty Utilities Storm Planning Reports
D. NH Puc E-33 Forms
E. Storm Call Documents
F. All Events
G. Storm Timeline of Events

THIS PAGE INTENTIONALLY LEFT BLANK

Appendix *A*

Weather Sentry DTN Energy Event Index Tables

Energy Event Index for ALGONQUIN POWER

Valid Time: March 5, 2018 8:00 AM EST

Parameter	Region	Day 1	Day 2	Day 3	Day 4	Day 5	Day 6	Day 7	Day 8	Day 9	Day 10
Wind Speed	Montauk NY	1	1	1	1	1	1	1	1	1	1
	Northern Lebanon Hanover NH	1	1	1	1	1	1	1	1	1	1
	Northwest Monroe Bath NH	1	1	1	1	1	1	1	1	1	1
	Southern Salem Derry NH	1	1	1	1	1	1	1	1	1	1
	Western Alstead Charlestown NH	1	1	1	1	1	1	1	1	1	1
Wind/Gust	Montauk NY	1	1	1	1	1	1	1	1	1	1
	Northern Lebanon Hanover NH	1	1	1	1	1	1	1	1	1	1
	Northwest Monroe Bath NH	1		1	1	1	1	1	1	1	1
	Southern Salem Derry NH	1	1	1	1	1	1	1	1	1	1
	Western Alstead Charlestown NH	1	1	1	1	1	1	1	1	1	1
Snow	Montauk NY	1	1	1	1	1	1	1	1	1	1
	Northern Lebanon Hanover NH	1	1	3	3	1	1	1	1	1	1
	Northwest Monroe Bath NH	1	1	3	3	1	1	1	1	1	1
	Southern Salem Derry NH	1	1	3	3	1	1	1	1	1	1
	Western Alstead Charlestown NH	1	1	3	3	1	1	1	1	1	1
Ice	Montauk NY	1	1	1	1	1	1	1	1	1	1
	Northern Lebanon Hanover NH	1	1	1	1	1	1	1	1	1	1
	Northwest Monroe Bath NH	1	1	1	1	1	1	1	1	1	1
	Southern Salem Derry NH	1	1	1	1	1	1	1	1	1	1
	Western Alstead Charlestown NH	1	1	1	1	1	1	1	1	1	1
Confidence Level	Montauk NY	High	High	Medium	Medium	High	High	High	High	High	High
	Northern Lebanon Hanover NH	High	High	Medium	Medium	High	High	High	High	High	High
	Northwest Monroe Bath NH	High	High	Medium	Medium	High	High	High	High	High	High
	Southern Salem Derry NH	High	High	Medium	Medium	High	High	High	High	High	High
	Western Alstead Charlestown NH	High	High	Medium	Medium	High	High	High	High	High	High

Energy Event Index for ALGONQUIN POWER

Valid Time: March 5, 2018 4:00 PM EST

Parameter	Region	Day 1	Day 2	Day 3	Day 4	Day 5	Day 6	Day 7	Day 8	Day 9	Day 10
Wind Speed	Montauk NY	1	1	1	1	1	1	1	1	1	1
	Northern Lebanon Hanover NH	1	1	1	1	1	1	1	1	1	1
	Northwest Monroe Bath NH	1	1	1	1	1	1	1	1	1	1
	Southern Salem Derry NH	1	1	1	1	1	1	1	1	1	1
	Western Alstead Charlestown NH	1	1	1	1	1	1	1	1	1	1
Wind/Gust	Montauk NY	1	1	1	1	1	1	1	1	1	1
	Northern Lebanon Hanover NH	1	1	1	1	1	1	1	1	1	1
	Northwest Monroe Bath NH	1	1	1	1	1	1	1	1	1	1
	Southern Salem Derry NH	1	1	1	1	1	1	1	1	1	1
	Western Alstead Charlestown NH	1	1	1	1	1	1	1	1	1	1
Snow	Montauk NY	1	1	1	1	1	1	1	1	1	1
	Northern Lebanon Hanover NH	1	1	3	3	1	1	1	1	1	1
	Northwest Monroe Bath NH	1	1	3	3	1	1	1	1	1	1
	Southern Salem Derry NH	1	1	3	3	1	1	1	1	1	1
	Western Alstead Charlestown NH	1	1	3	3	1	1	1	1	1	1
Ice	Montauk NY	1	1	1	1	1	1	1	1	1	1
	Northern Lebanon Hanover NH	1	1	1	1	1	1	1	1	1	1
	Northwest Monroe Bath NH	1	1	1	1	1	1	1	1	1	1
	Southern Salem Derry NH	1	1	1	1	1	1	1	1	1	1
	Western Alstead Charlestown NH	1	1	1	1	1	1	1	1	1	1
Confidence Level	Montauk NY	High	High	Medium	Medium	High	High	High	High	High	High
	Northern Lebanon Hanover NH	High	High	Medium	Medium	High	High	High	High	High	High
	Northwest Monroe Bath NH	High	High	Medium	Medium	High	High	High	High	High	High
	Southern Salem Derry NH	High	High	Medium	Medium	High	High	High	High	High	High
	Western Alstead Charlestown NH	High	High	Medium	Medium	High	High	High	High	High	High

Energy Event Index for ALGONQUIN POWER

Valid Time: March 6, 2018 8:00 AM EST

Parameter	Region	Day 1	Day 2	Day 3	Day 4	Day 5	Day 6	Day 7	Day 8	Day 9	Day 10
Wind Speed	Montauk NY	1	1	1	1	1	1	1	1	1	1
	Northern Lebanon Hanover NH	1	1	1	1	1	1	1	1	1	1
	Northwest Monroe Bath NH	1	1	1	1	1	1	1	1	1	1
	Southern Salem Derry NH	1	1	1	1	1	1	1	1	1	1
	Western Alstead Charlestown NH	1	1	1	1	1	1	1	1	1	1
Wind/Gust	Montauk NY	1	1	1	1	1	1	1	1	1	1
	Northern Lebanon Hanover NH	1	1	1	1	1	1	1	1	1	1
	Northwest Monroe Bath NH	1	1	1	1	1	1	1	1	1	1
	Southern Salem Derry NH	1	1	1	1	1	1	1	1	1	1
	Western Alstead Charlestown NH	1	1	1	1	1	1	1	1	1	1
Snow	Montauk NY	1	1	1	1	1	1	1	1	1	1
	Northern Lebanon Hanover NH	1	3	3	1	1	1	1	1	1	1
	Northwest Monroe Bath NH	1	3	3	1	1	1	1	1	1	1
	Southern Salem Derry NH	1	4	4	1	1	1	1	1	1	1
	Western Alstead Charlestown NH	1	3	3	1	1	1	1	1	1	1
Ice	Montauk NY	1	1	1	1	1	1	1	1	1	1
	Northern Lebanon Hanover NH	1	1	1	1	1	1	1	1	1	1
	Northwest Monroe Bath NH	1	1	1	1	1	1	1	1	1	1
	Southern Salem Derry NH	1	1	1	1	1	1	1	1	1	1
	Western Alstead Charlestown NH	1	1	1	1	1	1	1	1	1	1
Confidence Level	Montauk NY	High	High	High	High	High	High	High	High	High	High
	Northern Lebanon Hanover NH	High	High	High	High	High	High	High	High	High	High
	Northwest Monroe Bath NH	High	High	High	High	High	High	High	High	High	High
	Southern Salem Derry NH	High	High	High	High	High	High	High	High	High	High
	Western Alstead Charlestown NH	High	High	High	High	High	High	High	High	High	High

Energy Event Index for ALGONQUIN POWER

Valid Time: March 6, 2018 3:00 PM EST

Parameter	Region	Day 1	Day 2	Day 3	Day 4	Day 5	Day 6	Day 7	Day 8	Day 9	Day 10
Wind Speed	Montauk NY	1	1	1	1	1	1	1	1	1	1
	Northern Lebanon Hanover NH	1	1	1	1	1	1	1	1	1	1
	Northwest Monroe Bath NH	1	1	1	1	1	1	1	1	1	1
	Southern Salem Derry NH	1	1	1	1	1	1	1	1	1	1
	Western Alstead Charlestown NH	1	1	1	1	1	1	1	1	1	1
Wind/Gust	Montauk NY	1	1	1	1	1	1	1	1	1	1
	Northern Lebanon Hanover NH	1	1	1	1	1	1	1	1	1	1
	Northwest Monroe Bath NH	1	1	1	1	1	1	1	1	1	1
	Southern Salem Derry NH	1	1	1	1	1	1	1	1	1	1
	Western Alstead Charlestown NH	1	1	1	1	1	1	1	1	1	1
Snow	Montauk NY	1	1	1	1	1	1	1	1	1	1
	Northern Lebanon Hanover NH	1	3	3	1	1	1	1	1	1	1
	Northwest Monroe Bath NH	1	3	3	1	1	1	1	1	1	1
	Southern Salem Derry NH	1	4	4	1	1	1	1	1	1	1
	Western Alstead Charlestown NH	1	3	3	1	1	1	1	1	1	1
Ice	Montauk NY	1	1	1	1	1	1	1	1	1	1
	Northern Lebanon Hanover NH	1	1	1	1	1	1	1	1	1	1
	Northwest Monroe Bath NH	1	1	1	1	1	1	1	1	1	1
	Southern Salem Derry NH	1	1	1	1	1	1	1	1	1	1
	Western Alstead Charlestown NH	1	1	1	1	1	1	1	1	1	1
Confidence Level	Montauk NY	High	High	High	High	High	High	High	High	High	High
	Northern Lebanon Hanover NH	High	High	High	High	High	High	High	High	High	High
	Northwest Monroe Bath NH	High	High	High	High	High	High	High	High	High	High
	Southern Salem Derry NH	High	High	High	High	High	High	High	High	High	High
	Western Alstead Charlestown NH	High	High	High	High	High	High	High	High	High	High

Energy Event Index for ALGONQUIN POWER

Valid Time: March 7, 2018 8:00 AM EST

Parameter	Region	Day 1	Day 2	Day 3	Day 4	Day 5	Day 6	Day 7	Day 8	Day 9	Day 10
Wind Speed	Montauk NY	1	1	1	1	1	1	1	1	1	1
	Northern Lebanon Hanover NH	1	1	1	1	1	1	1	1	1	1
	Northwest Monroe Bath NH	1	1	1	1	1	1	1	1	1	1
	Southern Salem Derry NH	1	1	1	1	1	1	1	1	1	1
	Western Alstead Charlestown NH	1	1	1	1	1	1	1	1	1	1
Wind/Gust	Montauk NY	1	1	1	1	1	1	1	1	1	1
	Northern Lebanon Hanover NH	1	1	1	1	1	1	1	1	1	1
	Northwest Monroe Bath NH	1	1	1	1	1	1	1	1	1	1
	Southern Salem Derry NH	1	1	1	1	1	1	1	1	1	1
	Western Alstead Charlestown NH	1	1	1	1	1	1	1	1	1	1
Snow	Montauk NY	1	1	1	1	1	1	1	1	1	1
	Northern Lebanon Hanover NH	3	3	1	1	1	1	1	1	1	1
	Northwest Monroe Bath NH	3	3	1	1	1	1	1	1	1	1
	Southern Salem Derry NH	4	4	1	1	1	1	1	1	1	1
	Western Alstead Charlestown NH	3	3	1	1	1	1	1	1	1	1
Ice	Montauk NY	1	1	1	1	1	1	1	1	1	1
	Northern Lebanon Hanover NH	1	1	1	1	1	1	1	1	1	1
	Northwest Monroe Bath NH	1	1	1	1	1	1	1	1	1	1
	Southern Salem Derry NH	1	1	1	1	1	1	1	1	1	1
	Western Alstead Charlestown NH	1	1	1	1	1	1	1	1	1	1
Confidence Level	Montauk NY	High	High	High	High	High	High	High	High	High	High
	Northern Lebanon Hanover NH	High	High	High	High	High	High	High	High	High	High
	Northwest Monroe Bath NH	High	High	High	High	High	High	High	High	High	High
	Southern Salem Derry NH	High	High	High	High	High	High	High	High	High	High
	Western Alstead Charlestown NH	High	High	High	High	High	High	High	High	High	High

Energy Event Index for ALGONQUIN POWER

Valid Time: March 7, 2018 4:00 PM EST

Parameter	Region	Day 1	Day 2	Day 3	Day 4	Day 5	Day 6	Day 7	Day 8	Day 9	Day 10
Wind Speed	Montauk NY	1	1	1	1	1	1	1	1	1	1
	Northern Lebanon Hanover NH	1	1	1	1	1	1	1	1	1	1
	Northwest Monroe Bath NH	1	1	1	1	1	1	1	1	1	1
	Southern Salem Derry NH	1	1	1	1	1	1	1	1	1	1
	Western Alstead Charlestown NH	1	1	1	1	1	1	1	1	1	1
Wind/Gust	Montauk NY	1	1	1	1	1	1	1	1	1	1
	Northern Lebanon Hanover NH	1	1	1	1	1	1	1	1	1	1
	Northwest Monroe Bath NH	1	1	1	1	1	1	1	1	1	1
	Southern Salem Derry NH	1	1	1	1	1	1	1	1	1	1
	Western Alstead Charlestown NH	1	1	1	1	1	1	1	1	1	1
Snow	Montauk NY	1	1	1	1	1	1	1	1	1	1
	Northern Lebanon Hanover NH	3	3	1	1	1	1	1	1	1	1
	Northwest Monroe Bath NH	3	3	1	1	1	1	1	1	1	1
	Southern Salem Derry NH	3	3	1	1	1	1	1	1	1	1
	Western Alstead Charlestown NH	4	4	1	1	1	1	1	1	1	1
Ice	Montauk NY	1	1	1	1	1	1	1	1	1	1
	Northern Lebanon Hanover NH	1	1	1	1	1	1	1	1	1	1
	Northwest Monroe Bath NH	1	1	1	1	1	1	1	1	1	1
	Southern Salem Derry NH	1	1	1	1	1	1	1	1	1	1
	Western Alstead Charlestown NH	1	1	1	1	1	1	1	1	1	1
Confidence Level	Montauk NY	High	High	High	High	High	High	High	High	High	High
	Northern Lebanon Hanover NH	High	High	High	High	High	High	High	High	High	High
	Northwest Monroe Bath NH	High	High	High	High	High	High	High	High	High	High
	Southern Salem Derry NH	High	High	High	High	High	High	High	High	High	High
	Western Alstead Charlestown NH	High	High	High	High	High	High	High	High	High	High

Energy Event Index for ALGONQUIN POWER

Valid Time: March 8, 2018 8:00 AM EST

Parameter	Region	Day 1	Day 2	Day 3	Day 4	Day 5	Day 6	Day 7	Day 8	Day 9	Day 10
Wind Speed	Montauk NY	1	1	1	1	1	1	1	1	1	1
	Northern Lebanon Hanover NH	1	1	1	1	1	1	1	1	1	1
	Northwest Monroe Bath NH	1	1	1	1	1	1	1	1	1	1
	Southern Salem Derry NH	1	1	1	1	1	1	1	1	1	1
	Western Alstead Charlestown NH	1	1	1	1	1	1	1	1	1	1
Wind/Gust	Montauk NY	1	1	1	1	1	1	1	1	1	1
	Northern Lebanon Hanover NH	1	1	1	1	1	1	1	1	1	1
	Northwest Monroe Bath NH	1	1	1	1	1	1	1	1	1	1
	Southern Salem Derry NH	1	1	1	1	1	1	1	1	1	1
	Western Alstead Charlestown NH	1	1	1	1	1	1	1	1	1	1
Snow	Montauk NY	1	1	1	1	1	1	1	1	1	1
	Northern Lebanon Hanover NH	3	1	1	1	1	1	1	1	1	1
	Northwest Monroe Bath NH	3	1	1	1	1	1	1	1	1	1
	Southern Salem Derry NH	3	1	1	1	1	1	1	1	1	1
	Western Alstead Charlestown NH	4	1	1	1	1	1	1	1	1	1
Ice	Montauk NY	1	1	1	1	1	1	1	1	1	1
	Northern Lebanon Hanover NH	1	1	1	1	1	1	1	1	1	1
	Northwest Monroe Bath NH	1	1	1	1	1	1	1	1	1	1
	Southern Salem Derry NH	1	1	1	1	1	1	1	1	1	1
	Western Alstead Charlestown NH	1	1	1	1	1	1	1	1	1	1
Confidence Level	Montauk NY	High	High	High	High	High	High	High	High	High	High
	Northern Lebanon Hanover NH	High	High	High	High	High	High	High	High	High	High
	Northwest Monroe Bath NH	High	High	High	High	High	High	High	High	High	High
	Southern Salem Derry NH	High	High	High	High	High	High	High	High	High	High
	Western Alstead Charlestown NH	High	High	High	High	High	High	High	High	High	High

Energy Event Index for ALGONQUIN POWER

Valid Time: March 8, 2018 4:00 PM EST

Parameter	Region	Day 1	Day 2	Day 3	Day 4	Day 5	Day 6	Day 7	Day 8	Day 9	Day 10
Wind Speed	Montauk NY	1	1	1	1	1	1	1	1	1	1
	Northern Lebanon Hanover NH	1	1	1	1	1	1	1	1	1	1
	Northwest Monroe Bath NH	1	1	1	1	1	1	1	1	1	1
	Southern Salem Derry NH	1	1	1	1	1	1	1	1	1	1
	Western Alstead Charlestown NH	1	1	1	1	1	1	1	1	1	1
Wind/Gust	Montauk NY	1	1	1	1	1	1	1	1	1	1
	Northern Lebanon Hanover NH	1	1	1	1	1	1	1	1	1	1
	Northwest Monroe Bath NH	1	1	1	1	1	1	1	1	1	1
	Southern Salem Derry NH	1	1	1	1	1	1	1	1	1	1
	Western Alstead Charlestown NH	1	1	1	1	1	1	1	1	1	1
Snow	Montauk NY	1	1	1	1	1	1	1	1	1	1
	Northern Lebanon Hanover NH	3	1	1	1	1	1	1	1	1	1
	Northwest Monroe Bath NH	3	1	1	1	1	1	1	1	1	1
	Southern Salem Derry NH	3	1	1	1	1	1	1	1	1	1
	Western Alstead Charlestown NH	4	1	1	1	1	1	1	1	1	1
Ice	Montauk NY	1	1	1	1	1	1	1	1	1	1
	Northern Lebanon Hanover NH	1	1	1	1	1	1	1	1	1	1
	Northwest Monroe Bath NH	1	1	1	1	1	1	1	1	1	1
	Southern Salem Derry NH	1	1	1	1	1	1	1	1	1	1
	Western Alstead Charlestown NH	1	1	1	1	1	1	1	1	1	1
Confidence Level	Montauk NY	High	High	High	High	Medium	High	High	High	High	High
	Northern Lebanon Hanover NH	High	High	High	High	Medium	High	High	High	High	High
	Northwest Monroe Bath NH	High	High	High	High	Medium	High	High	High	High	High
	Southern Salem Derry NH	High	High	High	High	Medium	High	High	High	High	High
	Western Alstead Charlestown NH	High	High	High	High	Medium	High	High	High	High	High

Energy Event Index for ALGONQUIN POWER

Valid Time: March 9, 2018 8:00 AM EST

Parameter	Region	Day 1	Day 2	Day 3	Day 4	Day 5	Day 6	Day 7	Day 8	Day 9	Day 10
Wind Speed	Montauk NY	1	1	1	1	1	1	1	1	1	1
	Northern Lebanon Hanover NH	1	1	1	1	1	1	1	1	1	1
	Northwest Monroe Bath NH	1	1	1	1	1	1	1	1	1	1
	Southern Salem Derry NH	1	1	1	1	1	1	1	1	1	1
	Western Alstead Charlestown NH	1	1	1	1	1	1	1	1	1	1
Wind/Gust	Montauk NY	1	1	1	1	1	1	1	1	1	1
	Northern Lebanon Hanover NH	1	1	1	1	1	1	1	1	1	1
	Northwest Monroe Bath NH	1	1	1	1	1	1	1	1	1	1
	Southern Salem Derry NH	1	1	1	1	1	1	1	1	1	1
	Western Alstead Charlestown NH	1	1	1	1	1	1	1	1	1	1
Snow	Montauk NY	1	1	1	1	1	1	1	1	1	1
	Northern Lebanon Hanover NH	1	1	1	1	1	1	1	1	1	1
	Northwest Monroe Bath NH	1	1	1	1	1	1	1	1	1	1
	Southern Salem Derry NH	1	1	1	1	1	1	1	1	1	1
	Western Alstead Charlestown NH	1	1	1	1	1	1	1	1	1	1
Ice	Montauk NY	1	1	1	1	1	1	1	1	1	1
	Northern Lebanon Hanover NH	1	1	1	1	1	1	1	1	1	1
	Northwest Monroe Bath NH	1	1	1	1	1	1	1	1	1	1
	Southern Salem Derry NH	1	1	1	1	1	1	1	1	1	1
	Western Alstead Charlestown NH	1	1	1	1	1	1	1	1	1	1
Confidence Level	Montauk NY	High	High	High	Medium	High	High	High	High	High	High
	Northern Lebanon Hanover NH	High	High	High	Medium	High	High	High	High	High	High
	Northwest Monroe Bath NH	High	High	High	Medium	High	High	High	High	High	High
	Southern Salem Derry NH	High	High	High	Medium	High	High	High	High	High	High
	Western Alstead Charlestown NH	High	High	High	Medium	High	High	High	High	High	High

Energy Event Index for ALGONQUIN POWER

Valid Time: March 9, 2018 4:00 PM EST

Parameter	Region	Day 1	Day 2	Day 3	Day 4	Day 5	Day 6	Day 7	Day 8	Day 9	Day 10
Wind Speed	Montauk NY	1	1	1	1	1	1	1	1	1	1
	Northern Lebanon Hanover NH	1	1	1	1	1	1	1	1	1	1
	Northwest Monroe Bath NH	1	1	1	1	1	1	1	1	1	1
	Southern Salem Derry NH	1	1	1	1	1	1	1	1	1	1
	Western Alstead Charlestown NH	1	1	1	1	1	1	1	1	1	1
Wind/Gust	Montauk NY	1	1	1	1	1	1	1	1	1	1
	Northern Lebanon Hanover NH	1	1	1	1	1	1	1	1	1	1
	Northwest Monroe Bath NH	1	1	1	1	1	1	1	1	1	1
	Southern Salem Derry NH	1	1	1	1	1	1	1	1	1	1
	Western Alstead Charlestown NH	1	1	1	1	1	1	1	1	1	1
Snow	Montauk NY	1	1	1	1	1	1	1	1	1	1
	Northern Lebanon Hanover NH	1	1	1	1	1	1	1	1	1	1
	Northwest Monroe Bath NH	1	1	1	1	1	1	1	1	1	1
	Southern Salem Derry NH	1	1	1	1	1	1	1	1	1	1
	Western Alstead Charlestown NH	1	1	1	1	1	1	1	1	1	1
Ice	Montauk NY	1	1	1	1	1	1	1	1	1	1
	Northern Lebanon Hanover NH	1	1	1	1	1	1	1	1	1	1
	Northwest Monroe Bath NH	1	1	1	1	1	1	1	1	1	1
	Southern Salem Derry NH	1	1	1	1	1	1	1	1	1	1
	Western Alstead Charlestown NH	1	1	1	1	1	1	1	1	1	1
Confidence Level	Montauk NY	High	High	High	Medium	High	High	High	High	High	High
	Northern Lebanon Hanover NH	High	High	High	Medium	High	High	High	High	High	High
	Northwest Monroe Bath NH	High	High	High	Medium	High	High	High	High	High	High
	Southern Salem Derry NH	High	High	High	Medium	High	High	High	High	High	High
	Western Alstead Charlestown NH	High	High	High	Medium	High	High	High	High	High	High

Energy Event Index for ALGONQUIN POWER

Valid Time: March 10, 2018 8:00 AM EST

Parameter	Region	Day 1	Day 2	Day 3	Day 4	Day 5	Day 6	Day 7	Day 8	Day 9	Day 10
Wind Speed	Montauk NY	1	1	1	1	1	1	1	1	1	1
	Northern Lebanon Hanover NH	1	1	1	1	1	1	1	1	1	1
	Northwest Monroe Bath NH	1	1	1	1	1	1	1	1	1	1
	Southern Salem Derry NH	1	1	1	1	1	1	1	1	1	1
	Western Alstead Charlestown NH	1	1	1	1	1	1	1	1	1	1
Wind/Gust	Montauk NY	1	1	1	1	1	1	1	1	1	1
	Northern Lebanon Hanover NH	1	1	1	1	1	1	1	1	1	1
	Northwest Monroe Bath NH	1	1	1	1	1	1	1	1	1	1
	Southern Salem Derry NH	1	1	1	1	1	1	1	1	1	1
	Western Alstead Charlestown NH	1	1	1	1	1	1	1	1	1	1
Snow	Montauk NY	1	1	1	1	1	1	1	1	1	1
	Northern Lebanon Hanover NH	1	1	1	1	1	1	1	1	1	1
	Northwest Monroe Bath NH	1	1	1	1	1	1	1	1	1	1
	Southern Salem Derry NH	1	1	1	1	1	1	1	1	1	1
	Western Alstead Charlestown NH	1	1	1	1	1	1	1	1	1	1
Ice	Montauk NY	1	1	1	1	1	1	1	1	1	1
	Northern Lebanon Hanover NH	1	1	1	1	1	1	1	1	1	1
	Northwest Monroe Bath NH	1	1	1	1	1	1	1	1	1	1
	Southern Salem Derry NH	1	1	1	1	1	1	1	1	1	1
	Western Alstead Charlestown NH	1	1	1	1	1	1	1	1	1	1
Confidence Level	Montauk NY	High	High	Medium	High	High	High	High	High	High	High
	Northern Lebanon Hanover NH	High	High	Medium	High	High	High	High	High	High	High
	Northwest Monroe Bath NH	High	High	Medium	High	High	High	High	High	High	High
	Southern Salem Derry NH	High	High	Medium	High	High	High	High	High	High	High
	Western Alstead Charlestown NH	High	High	Medium	High	High	High	High	High	High	High

Energy Event Index for ALGONQUIN POWER

Valid Time: March 10, 2018 4:00 PM EST

Parameter	Region	Day 1	Day 2	Day 3	Day 4	Day 5	Day 6	Day 7	Day 8	Day 9	Day 10
Wind Speed	Montauk NY	1	1	1	1	1	1	1	1	1	1
	Northern Lebanon Hanover NH	1	1	1	1	1	1	1	1	1	1
	Northwest Monroe Bath NH	1	1	1	1	1	1	1	1	1	1
	Southern Salem Derry NH	1	1	1	1	1	1	1	1	1	1
	Western Alstead Charlestown NH	1	1	1	1	1	1	1	1	1	1
Wind/Gust	Montauk NY	1	1	1	1	1	1	1	1	1	1
	Northern Lebanon Hanover NH	1	1	1	1	1	1	1	1	1	1
	Northwest Monroe Bath NH	1	1	1	1	1	1	1	1	1	1
	Southern Salem Derry NH	1	1	1	1	1	1	1	1	1	1
	Western Alstead Charlestown NH	1	1	1	1	1	1	1	1	1	1
Snow	Montauk NY	1	1	1	1	1	1	1	1	1	1
	Northern Lebanon Hanover NH	1	1	1	2	2	1	1	1	1	1
	Northwest Monroe Bath NH	1	1	1	3	3	1	1	1	1	1
	Southern Salem Derry NH	1	1	1	3	3	1	1	1	1	1
	Western Alstead Charlestown NH	1	1	1	2	2	1	1	1	1	1
Ice	Montauk NY	1	1	1	1	1	1	1	1	1	1
	Northern Lebanon Hanover NH	1	1	1	1	1	1	1	1	1	1
	Northwest Monroe Bath NH	1	1	1	1	1	1	1	1	1	1
	Southern Salem Derry NH	1	1	1	1	1	1	1	1	1	1
	Western Alstead Charlestown NH	1	1	1	1	1	1	1	1	1	1
Confidence Level	Montauk NY	High	High	High	Medium	Medium	High	High	High	High	High
	Northern Lebanon Hanover NH	High	High	High	Medium	Medium	High	High	High	High	High
	Northwest Monroe Bath NH	High	High	High	Medium	Medium	High	High	High	High	High
	Southern Salem Derry NH	High	High	High	Medium	Medium	High	High	High	High	High
	Western Alstead Charlestown NH	High	High	High	Medium	Medium	High	High	High	High	High

Energy Event Index for ALGONQUIN POWER

Valid Time: March 11, 2018 8:00 AM EDT

Parameter	Region	Day 1	Day 2	Day 3	Day 4	Day 5	Day 6	Day 7	Day 8	Day 9	Day 10
Wind Speed	Montauk NY	1	1	1	1	1	1	1	1	1	1
	Northern Lebanon Hanover NH	1	1	1	1	1	1	1	1	1	1
	Northwest Monroe Bath NH	1	1	1	1	1	1	1	1	1	1
	Southern Salem Derry NH	1	1	1	1	1	1	1	1	1	1
	Western Alstead Charlestown NH	1	1	1	1	1	1	1	1	1	1
Wind/Gust	Montauk NY	1	1	1	1	1	1	1	1	1	1
	Northern Lebanon Hanover NH	1	1	1	1	1	1	1	1	1	1
	Northwest Monroe Bath NH	1	1	1	1	1	1	1	1	1	1
	Southern Salem Derry NH	1	1	1	1	1	1	1	1	1	1
	Western Alstead Charlestown NH	1	1	1	1	1	1	1	1	1	1
Snow	Montauk NY	1	1	1	1	1	1	1	1	1	1
	Northern Lebanon Hanover NH	1	1	2	2	1	1	1	1	1	1
	Northwest Monroe Bath NH	1	1	3	3	1	1	1	1	1	1
	Southern Salem Derry NH	1	1	3	3	1	1	1	1	1	1
	Western Alstead Charlestown NH	1	1	2	2	1	1	1	1	1	1
Ice	Montauk NY	1	1	1	1	1	1	1	1	1	1
	Northern Lebanon Hanover NH	1	1	1	1	1	1	1	1	1	1
	Northwest Monroe Bath NH	1	1	1	1	1	1	1	1	1	1
	Southern Salem Derry NH	1	1	1	1	1	1	1	1	1	1
	Western Alstead Charlestown NH	1	1	1	1	1	1	1	1	1	1
Confidence Level	Montauk NY	High	High	Medium	Medium	High	High	High	High	High	High
	Northern Lebanon Hanover NH	High	High	Medium	Medium	High	High	High	High	High	High
	Northwest Monroe Bath NH	High	High	Medium	Medium	High	High	High	High	High	High
	Southern Salem Derry NH	High	High	Medium	Medium	High	High	High	High	High	High
	Western Alstead Charlestown NH	High	High	Medium	Medium	High	High	High	High	High	High

Energy Event Index for ALGONQUIN POWER

Valid Time: March 11, 2018 4:00 PM EDT

Parameter	Region	Day 1	Day 2	Day 3	Day 4	Day 5	Day 6	Day 7	Day 8	Day 9	Day 10
Wind Speed	Montauk NY	1	1	1	1	1	1	1	1	1	1
	Northern Lebanon Hanover NH	1	1	1	1	1	1	1	1	1	1
	Northwest Monroe Bath NH	1	1	1	1	1	1	1	1	1	1
	Southern Salem Derry NH	1	1	1	1	1	1	1	1	1	1
	Western Alstead Charlestown NH	1	1	1	1	1	1	1	1	1	1
Wind/Gust	Montauk NY	1	1	1	1	1	1	1	1	1	1
	Northern Lebanon Hanover NH	1	1	1	1	1	1	1	1	1	1
	Northwest Monroe Bath NH	1	1	1	1	1	1	1	1	1	1
	Southern Salem Derry NH	1	1	1	1	1	1	1	1	1	1
	Western Alstead Charlestown NH	1	1	1	1	1	1	1	1	1	1
Snow	Montauk NY	1	1	1	1	1	1	1	1	1	1
	Northern Lebanon Hanover NH	1	1	3	3	1	1	1	1	1	1
	Northwest Monroe Bath NH	1	1	3	3	1	1	1	1	1	1
	Southern Salem Derry NH	1	1	3	3	1	1	1	1	1	1
	Western Alstead Charlestown NH	1	1	3	3	1	1	1	1	1	1
Ice	Montauk NY	1	1	1	1	1	1	1	1	1	1
	Northern Lebanon Hanover NH	1	1	1	1	1	1	1	1	1	1
	Northwest Monroe Bath NH	1	1	1	1	1	1	1	1	1	1
	Southern Salem Derry NH	1	1	1	1	1	1	1	1	1	1
	Western Alstead Charlestown NH	1	1	1	1	1	1	1	1	1	1
Confidence Level	Montauk NY	High	High	High	High	High	High	High	High	High	High
	Northern Lebanon Hanover NH	High	High	High	High	High	High	High	High	High	High
	Northwest Monroe Bath NH	High	High	High	High	High	High	High	High	High	High
	Southern Salem Derry NH	High	High	High	High	High	High	High	High	High	High
	Western Alstead Charlestown NH	High	High	High	High	High	High	High	High	High	High

THIS PAGE INTENTIONALLY LEFT BLANK

Appendix *B*

Liberty Utilities Daily Weather Summaries

DATE: Monday, March 05, 2018

	Weather Condition	Weather Severity	Area(s) Impacted	Actions Taken	Comments
Today	Snow	Scattered Amount: ¼-1"	All Service Areas	No Action Necessary ☒ Notified Operations ☐ Who: When: How:	Hazardous Weather Outlook
Tuesday	Fair Weather	..... Amount:	All Electric Areas	No Action Necessary ☒ Notified Operations ☐ Who: When: How:	
Wednesday	Snow Windy	Normal Consistantcy Amount: 1-5"	All Service Areas	No Action Necessary ☐ Notified Operations ☒ Who: Ele Ops When: 3/5/18 How: email	Winter Storm Watch Snow begins late afternoon becoming moderate into the evening hours.
Thursday	Snow Windy	Normal Consistantcy Amount: 3-7"	All Service Areas	No Action Necessary ☐ Notified Operations ☒ Who: Ele Ops When: 3/5/18 How: email	
Friday	Snow	Flurries Amount: <1/4"	Charlestown/Lebanon	No Action Necessary ☒ Notified Operations ☐ Who: When: How:	
Saturday	Fair Weather	..... Amount:	Choose an item	No Action Necessary ☒ Notified Operations ☐ Who: When: How:	
Sunday	Fair Weather	..... Amount:	Choose an item	No Action Necessary ☒ Notified Operations ☐ Who: When: How:	
> 7 DAYS	.....			No Action Necessary ☒ Notified Operations ☐ Who: When: How:	3/12 Rain in Salem 3/12 Flurries in all other areas 3/13 Snow/Rain all areas 1-3

DATE: Tuesday, March 06, 2018

	Weather Condition	Weather Severity	Area(s) Impacted	Actions Taken	Comments
Today	Fair Weather	..... Amount:	All Service Areas	No Action Necessary ☒ Notified Operations ☐ Who: When: How:	Hazardous Weather Outlook
Wednesday	Snow Windy	Wet Consistancy Amount: 3-7"	All Service Areas	No Action Necessary ☐ Notified Operations ☒ Who: Ele Ops When: 3/6/18 How: email	Winter Storm Warning Heavy wet snow expected in all areas **EEI-4 in Salem/Manchester**
Thursday	Snow Tropical Storm	Wet Consistancy Amount: 5-10"	All Service Areas	No Action Necessary ☐ Notified Operations ☒ Who: Ele Ops When: 3/6/18 How: email	Winter Storm Warning Heavy wet snow expected in all areas **EEI-4 in Salem/Manchester**
Friday	Fair Weather	..... Amount:	All Service Areas	No Action Necessary ☒ Notified Operations ☐ Who: When: How:	
Saturday	Fair Weather	..... Amount:	All Service Areas	No Action Necessary ☒ Notified Operations ☐ Who: When: How:	
Sunday	Fair Weather	..... Amount:	All Service Areas	No Action Necessary ☒ Notified Operations ☐ Who: When: How:	
Monday	Rain Snow	Light Amount: ¼-1"	Salem Manchester	No Action Necessary ☒ Notified Operations ☐ Who: When: How:	
> 7 DAYS	.....			No Action Necessary ☒ Notified Operations ☐ Who: When: How:	3/13 Snow/Rain in Salem & Manchester ¼-1"

DATE: Wednesday, March 07, 2018

	Weather Condition	Weather Severity	Area(s) Impacted	Actions Taken	Comments
Today	Snow Windy	Wet Consistancy Amount: 12-18"	All Service Areas	No Action Necessary ☒ Notified Operations ☒ Who: When: How:	Level 4 High Confidence (Salem NH) Snow begins slowly between 1-2pm. Heaviest snow fall between 11pm - 5am Thursday 12-18" 30-40mph gusts. Level 3 High Confidence (Lebanon/Charlestown NH) Snow will start after 1pm. Will continue into Thursday ending between 10-11pm. Amounts 7-10" total.
Thursday	Snow Windy	Wet Consistancy	All Service Areas	No Action Necessary ☒ Notified Operations ☐ Who: When: How:	Snow will continue for Salem ending around 5 am. Total amounts 12-18" Snow will continue into the evening for Lebanon/Charlestown total amounts 7-10"
Friday	Snow	Scattered	All Service Areas	No Action Necessary ☒ Notified Operations ☐ Who: When: How:	Flurries expected for all locations < ¼"
Saturday	Snow	Scattered Amount: < ¼"	All Service Areas	No Action Necessary ☒ Notified Operations ☐ Who: When: How:	Flurries expected for all locations < ¼"
Sunday	Fair Weather	.....	All Service Areas	No Action Necessary ☒ Notified Operations ☐ Who: When: How:	
Monday	Rain	Scattered	Salem	No Action Necessary ☒ Notified Operations ☐ Who: When: How:	
Tuesday	Snow Rain	Scattered	All Service Areas	No Action Necessary ☒ Notified Operations ☐ Who: When: How:	Mix rain/snow for all service locations ¼ -1"
> 7 DAYS	.....			No Action Necessary ☒ Notified Operations ☐ Who: When: How:	3/18, 3/19 and 3/20 rain and possible snow mix for all service locations.

DATE: Thursday, March 08, 2018

	Weather Condition	Weather Severity	Area(s) Impacted	Actions Taken	Comments
Today	Snow Windy	Wet Consistancy Amount: 3-5"	All Service Areas	No Action Necessary ☒ Notified Operations ☒ Who: When: How:	Level 3 High Confidence (Salem) Snow will continue for Salem 1-3"- Level 4 High Confidence (Lebanon/Charlestown NH) Snow will continue into the Lebanon/Charlestown- 3-5"
Friday	Snow Windy	Normal Consistantcy Amount: ¼-1"	All Service Areas	No Action Necessary ☒ Notified Operations ☐ Who: When: How:	PM snow flurries in all service areas.
Saturday	Fair Weather	.....	All Service Areas	No Action Necessary ☒ Notified Operations ☐ Who: When: How:	
Sunday	Fair Weather	..... Amount:	All Service Areas	No Action Necessary ☒ Notified Operations ☐ Who: When: How:	
Monday	Snow	Normal Consistantcy Amount:1-3"	All Service Areas	No Action Necessary ☒ Notified Operations ☐ Who: When: How:	
Tuesday	Snow	Normal Consistantcy Amount: 1-3"	Salem	No Action Necessary ☒ Notified Operations ☐ Who: When: How:	
Wednesday	Snow Rain	Scattered	All Service Areas	No Action Necessary ☒ Notified Operations ☐ Who: When: How:	
> 7 DAYS	.....			No Action Necessary ☒ Notified Operations ☐ Who: When: How:	3/18, 3/19 and 3/20 rain and possible snow mix for all service locations.

DATE: Friday, March 09, 2018

	Weather Condition	Weather Severity	Area(s) Impacted	Actions Taken	Comments
Today	Snow	Normal Consistantcy Amount: 1-3"	Charlestown	No Action Necessary ☒ Notified Operations ☐ Who: When: How:	PM snow flurries in all service areas.
Saturday	Windy	.....	All Service Areas	No Action Necessary ☒ Notified Operations ☐ Who: When: How:	Wind gust up to 25mph in all service areas.
Sunday	Fair Weather	.....	All Service Areas	No Action Necessary ☒ Notified Operations ☐ Who: When: How:	
Monday	Fair Weather	Flurries Amount: <1/4"	All Service Areas	No Action Necessary ☒ Notified Operations ☐ Who: When: How:	PM Flurries possible
Tuesday	Snow	Normal Consistantcy Amount:1-3"	All Service Areas	No Action Necessary ☒ Notified Operations ☐ Who: When: How:	
Wednesday	Snow	Flurries Amount: <1/4"	All Service Areas	No Action Necessary ☒ Notified Operations ☐ Who: When: How:	Isolated Flurries in all service areas.
Thursday	Snow	Flurries Amount: <1/4"	All Service Areas	No Action Necessary ☒ Notified Operations ☐ Who: When: How:	
> 7 DAYS	.....			No Action Necessary ☒ Notified Operations ☐ Who: When: How:	3/18, 3/19 and 3/20 rain and possible snow mix for all service locations.

DATE: Saturday, March 10, 2018

	Weather Condition	Weather Severity	Area(s) Impacted	Actions Taken	Comments
Today	Snow Windy	Flurries Amount: ¼" – 1"	All Service Areas	No Action Necessary ☒ Notified Operations ☐ Who: When: How:	Flurries in all service areas. Wind gusts possible up to 25mph, in all service areas from mid – late afternoon.
Sunday	Fair Weather	.....	All Service Areas	No Action Necessary ☒ Notified Operations ☐ Who: When: How:	
Monday	Fair Weather	.....	All Service Areas	No Action Necessary ☒ Notified Operations ☐ Who: When: How:	Evening Flurries in Lebanon/Charlestown
Tuesday	Snow	Normal Consistantcy Amount: 1-5"	All Service Areas	No Action Necessary ☒ Notified Operations ☐ Who: When: How:	
Wednesday	Snow	Flurries Amount: <1/4"	All Service Areas	No Action Necessary ☒ Notified Operations ☐ Who: When: How:	Isolated flurries in all service areas.
Thursday	Fair Weather	.....	All Service Areas	No Action Necessary ☒ Notified Operations ☐ Who: When: How:	
Friday	Fair Weather	.....	All Service Areas	No Action Necessary ☒ Notified Operations ☐ Who: When: How:	
> 7 DAYS	.....			No Action Necessary ☒ Notified Operations ☐ Who: When: How:	3/18, 3/19 and 3/20 rain and possible snow mix for all service locations.

DATE: Sunday, March 11, 2018

	Weather Condition	Weather Severity	Area(s) Impacted	Actions Taken	Comments
Today	Fair Weather	.....	All Service Areas	**No Action Necessary** ☒ **Notified Operations** ☐ **Who:** **When:** **How:**	
Monday	Fair Weather	.....	All Service Areas	**No Action Necessary** ☒ **Notified Operations** ☐ **Who:** **When:** **How:**	PM flurries possible in Lebanon/Charlestown - <1/4"
Tuesday	Snow Windy	Dry-Normal Consistency Amount: 6"-12" Wind Gusts 25-30mph Peak: 40-45mph	Salem Charlestown/Lebanon	**No Action Necessary** ☐ **Notified Operations** ☒ **Who: ELE OPS** **When: 3/10 & 3/11** **How:** Email	Level 3 EEI Snow Event (Salem) Level 2 EEI Snow Event (Lebanon/Charlestown) Snow fall occurs between 7a-7p on Tuesday w/ 1" per hour snowfall rates possible between 12pm-6pm. Snow fall accumulations: 8-12" Salem/Monroe, 6-10" Lebanon/Charlestown. Wind gusts 25-35mph / Peak gusts 40-45mph across Salem.
Wednesday	Snow	Normal Consistency Amount: 1-5"	All Service Areas	**No Action Necessary** ☒ **Notified Operations** ☐ **Who:** **When:** **How:**	
Thursday	Snow	Flurries Amount: <1/4"	All Service Areas	**No Action Necessary** ☒ **Notified Operations** ☐ **Who:** **When:** **How:**	Isolated flurries in all service areas.
Friday	Fair Weather	.....	All Service Areas	**No Action Necessary** ☒ **Notified Operations** ☐ **Who:** **When:** **How:**	
Saturday	Fair Weather	.....	All Service Areas	**No Action Necessary** ☒ **Notified Operations** ☐ **Who:** **When:** **How:**	
> 7 DAYS	.....			**No Action Necessary** ☒ **Notified Operations** ☐ **Who:** **When:** **How:**	3/18, 3/19 and 3/20 rain and possible snow mix for all service locations.

THIS PAGE INTENTIONALLY LEFT BLANK

Appendix *C*

Liberty Utilities Storm Planning Reports

DATE: Tuesday, March 06, 2018
TIME: 3:00 PM Winter Storm Quinn

	Lebanon	Salem	Charlestown	Comments
Weather Forecast	Snow to begin early Wed continuing into Thurs. Heaviest between 5pm Wed to 7am Thurs. 7 to 10" inches. Peak gusts 20-30 mph. Consistency will be heavy wet snow.	Snow to begin early Wed continuing into Thurs. Heaviest between 5pm Wed to 4am Thurs. 12 to 18" inches. Peak gusts 30-40 mph. Consistency will be heavy wet snow.	Snow to begin early Wed continuing into Thurs. Heaviest between 5pm Wed to 7am Thurs. 10 to 14" inches. Peak gusts 20-30 mph. Consistency will be heavy wet snow.	
Anticipated EERP Event Type	Type 2	Type 2	Type 2	
Resources - *only 9 internal crews due to vacancies and injuries/light duty.				**Totals**
Internal Crews	2.5	5.5	1	9
Contractor Crews	2	4		6
Total Line Crews available	4.5	9.5	1	15
Tree Crews	4	7	1	12
Wires Down	Will be staffed	Will be staffed	Will be staffed	
Other Support	Will be staffed	Will be staffed	Will be staffed	
LU Storm Room Status	N/A	N/A	N/A	
LU Municipal Room Status	closed			
Customer Outage Count	N/A	N/A	N/A	
Estimated Date/Time for Total Restoration	N/A	N/A	N/A	
Planned Storm Conference Calls	Next Call at 4:00 pm 3/7/18			
Notifications with Regulators. NHPUC/NH OEM	Planning Report			

All wires down and support staff will be staffed 24/7 for the Wed thru Fri. Customer service will also be staffed 24/7 for the duration of the storm and restoration.

EII Event Index & Storm Accounting

Description	GP Expense Job	GP VM Job
EII – Level 3/4 High Confidence	STORM-EXP-1807	STORM-VGMT-1807

DATE: Wednesday, March 07, 2018
TIME: 4:00 PM Winter Storm Quinn

	Lebanon	Salem	Charlestown	Comments
Weather Forecast	Snow will develop becoming heavy from 5pm to 11pm. Snow acc. 8-12". Gust up to 25-30 MPH. Consistency of snow is Normal.	Snow will continue becoming heavy from 6pm to 4am. Snow acc. 10-14". Gusts 25-35 MPH. Consistency of snow is Normal – Wet.	Snow will develop becoming heavy from 5pm to 11pm. Snow acc. 8-12". Gust up to 25-30 MPH. Consistency of snow is Normal.	
Anticipated EERP Event Type	Type 2	Type 2	Type 2	
Resources - *only 9 internal crews due to vacancies and injuries/light duty.				**Totals**
Internal Crews	2.5	5.5	1	9
Contractor Crews	4	4		8
Total Line Crews available	6.5	9.5	1	17
Tree Crews	4	7	1	12
Wires Down	Will be staffed	Will be staffed	Will be staffed	
Other Support	Will be staffed	Will be staffed	Will be staffed	
LU Storm Room Status	N/A	N/A	N/A	
LU Municipal Room Status	Open			Will be open 24/7 for duration of event
Customer Outage Count	N/A	N/A	N/A	
Estimated Date/Time for Total Restoration	N/A	N/A	N/A	
Planned Storm Conference Calls	Next Call at 4:00 pm 3/7/18 Next Call at 10:00 am 3/8/18			
Notifications with Regulators. NHPUC/NH OEM	Planning Report			

All wires down and support staff will be staffed 24/7 for the Wed thru Fri. Customer service will also be staffed 24/7 for the duration of the storm and restoration.

EII Event Index & Storm Accounting

Description	GP Expense Job	GP VM Job
EII – Level 3/4 High Confidence	STORM-EXP-1807	STORM-VGMT-1807

DATE: Thursday, March 08, 2018
TIME: 10:00 PM Winter Storm Quinn

	Lebanon	Salem	Charlestown	Comments
Weather Forecast	Light snow throughout the day with possible additional 1" of snow.	Light snow throughout the day with possible additional 1" of snow.	Light snow throughout the day with possible additional 1" of snow.	
Anticipated EERP Event Type	Type 1	Type 1	Type 1	
Resources - *only 9 internal crews due to vacancies and injuries/light duty.				**Totals**
Internal Crews	2.5	5.5	1	9
Contractor Crews		8		8
Total Line Crews available	6.5	9.5	1	17
Tree Crews		11	1	12
Wires Down	Will be staffed	Will be staffed	Will be staffed	
Other Support	Will be staffed	Will be staffed	Will be staffed	
				All wires down and support staff will be staffed 24/7 for the Wed thru Fri. Customer service will also be staffed 24/7 for the duration of the storm and restoration.
LU Storm Room Status	N/A	N/A	N/A	
LU Municipal Room Status	Open			Will be open 24/7 for duration of event
Customer Outage Count	0	18,231	0	Salem/Pelham/Windham and Derry area.
Estimated Date/Time for Total Restoration	N/A	N/A	N/A	We will continue to work around the clock to have 99% of customers back in power by Sunday 6:00 pm.
Planned Storm Conference Calls	Next Call at 4:00 pm 3/7/18 Next Call at 10:00 am 3/8/18 Next Call at 4:00 pm 3/8/18			
Notifications with Regulators. NHPUC/NH OEM	Planning Report			

EII Event Index & Storm Accounting

Description	GP Expense Job	GP VM Job
EII – Level 3/4 High Confidence	STORM-EXP-1807	STORM-VGMT-1807

DATE: Thursday, March 08, 2018
TIME: 4:00 PM Winter Storm Quinn

	Lebanon	Salem	Charlestown	Comments
Weather Forecast	Light snow throughout the day with possible additional 1" of snow.	Light snow throughout the day with possible additional 1" of snow.	Light snow throughout the day with possible additional 1" of snow.	Clear weather for the remainder of the weekend.
Anticipated EERP Event Type	Type 1	Type 1	Type 1	
Resources - *only 9 internal crews due to vacancies and injuries/light duty.				Totals
Internal Crews	2.5	5.5	1	9
Contractor Crews		11		11
Total Line Crews available	2.5	16.5	1	20
Tree Crews		20	1	21
Wires Down	Will be staffed	Will be staffed	Will be staffed	
Other Support	Will be staffed	Will be staffed	Will be staffed	
LU Storm Room Status	N/A	N/A	N/A	
LU Municipal Room Status	Closed	Open		Will be open 24/7 for duration of event. Lebanon Storm room closed.
Customer Outage Count	0	13,484	0	Salem/Pelham/Windham and Derry area.
Estimated Date/Time for Total Restoration	N/A	N/A	N/A	We will continue to work around the clock to have 99% of customers back in power by Sunday 6:00 pm.
Planned Storm Conference Calls	Next Call at 4:00 pm 3/7/18 Next Call at 10:00 am 3/8/18 Next Call at 4:00 pm 3/8/18 Next call at 10:00 am 3/9/18			
Notifications with Regulators. NHPUC/NH OEM	Planning Report			

All wires down and support staff will be staffed 24/7 for the Wed thru Fri. Customer service will also be staffed 24/7 for the duration of the storm and restoration. 12 damage assessment personnel.

EII Event Index & Storm Accounting

Description	GP Expense Job	GP VM Job
EII – Level 3/4 High Confidence	STORM-EXP-1807	STORM-VGMT-1807

DATE: Friday, March 09, 2018
TIME: 10:00 AM Winter Storm Quinn

	Lebanon	Salem	Charlestown	Comments
Weather Forecast	Fair weather with possible light flurries this afternoon.	Fair weather with possible light flurries this afternoon	Fair weather with possible light flurries this afternoon	Clear weather for the remainder of the weekend. Wind gust up to 25 mph on Saturday afternoon are possible.
Anticipated EERP Event Type	Type 1	Type 1	Type 1	
Resources - *only 9 internal crews due to vacancies and injuries/light duty.				**Totals**
Internal Crews	2.5	5.5	1	9
Contractor Crews		15		15
Total Line Crews available	2.5	20.5	1	24
Tree Crews		21	1	22
Wires Down	Will be staffed	Will be staffed	Will be staffed	
Other Support	Will be staffed	Will be staffed	Will be staffed	
				All wires down and support staff will be staffed 24/7 for the Wed thru Fri. Customer service will also be staffed 24/7 for the duration of the storm and restoration. 12 damage assessment personnel.
LU Storm Room Status	N/A	N/A	N/A	
LU Municipal Room Status	Closed	Open		Will be open 24/7 for duration of event. Lebanon Storm room closed.
Customer Outage Count	0	9,352	0	Salem/Pelham/Windham and Derry area. 3000 customers to be picked up by 3:00 pm today.
Estimated Date/Time for Total Restoration	N/A	N/A	N/A	We will continue to work around the clock to have 99% of customers back in power by Sunday 6:00 pm.
Planned Storm Conference Calls	Next Call at 4:00 pm 3/7/18 Next Call at 10:00 am 3/8/18 Next Call at 4:00 pm 3/8/18 Next call at 10:00 am 3/9/18 Next Call at 4:00 pm 3/9/18			
Notifications with Regulators. NHPUC/NH OEM	Planning Report			
EII Event Index & Storm Accounting	Description	GP Expense Job	GP VM Job	
	EII – Level 3/4 High Confidence	STORM-EXP-1807	STORM-VGMT-1807	

DATE: Friday, March 09, 2018
TIME: 4:00 PM Winter Storm Quinn

	Lebanon	Salem	Charlestown	Comments
Weather Forecast	Fair weather with possible light flurries this afternoon.	Fair weather with possible light flurries this afternoon	Fair weather with possible light flurries this afternoon	Clear weather for the remainder of the weekend. Wind gust up to 25 mph on Saturday afternoon are possible.
Anticipated EERP Event Type	Type 1	Type 1	Type 1	
Resources - *only 9 internal crews due to vacancies and injuries/light duty.				**Totals**
Internal Crews	2.5	5.5	1	9
Contractor Crews		15		15
Total Line Crews available	2.5	26.5	1	30
Tree Crews		21		21
Wires Down	Will be staffed	Will be staffed	Will be staffed	
Other Support	Will be staffed	Will be staffed	Will be staffed	
LU Storm Room Status	N/A	N/A	N/A	
LU Municipal Room Status	Closed	Open		Salem Storm room will be staffed 7 am to 7 pm for the weekend. Overnight coverage will be handled by Dispatch.
Customer Outage Count	0	7,328	0	Salem/Pelham/Windham and Derry area. 3000 customers were picked up due to National Grid Transmission line being restored to Spicket River Sub Station.
Estimated Date/Time for Total Restoration	N/A	N/A	N/A	We will continue to work around the clock to have 99% of customers back in power by Sunday 6:00 pm.
Planned Storm Conference Calls	Next Call at 4:00 pm 3/7/18 Next Call at 10:00 am 3/8/18 Next Call at 4:00 pm 3/8/18 Next call at 10:00 am 3/9/18 Next Call at 4:00 pm 3/9/18 Next Call at 10:00 am 3/10/18			
Notifications with Regulators. NHPUC/NH OEM	Planning Report			

All wires down and support staff will be staffed 24/7 for the duration of event. Customer service will also be staffed 24/7 for the duration of the storm and restoration. 12 damage assessment personnel.

4 Eversource
6 Unitil
4 Green Mountain

EII Event Index & Storm Accounting

Description	GP Expense Job	GP VM Job
EII – Level 3/4 High Confidence	STORM-EXP-1807	STORM-VGMT-1807

DATE: Saturday, March 10, 2018
TIME: 10:00 AM Winter Storm Quinn

	Lebanon	Salem	Charlestown	Comments
Weather Forecast	Fair weather with possible light flurries this afternoon.	Fair weather with possible light flurries this afternoon	Fair weather with possible light flurries this afternoon	Clear weather for the remainder of the weekend. Wind gust up to 25 mph on Saturday afternoon are possible.
Anticipated EERP Event Type	Type 1	Type 1	Type 1	
Resources - *only 9 internal crews due to vacancies and injuries/light duty.				**Totals**
Internal Crews	2.5	5.5	1	9
Contractor Crews		21		15
Total Line Crews available	2.5	26.5	1	30
Tree Crews		21		21
Wires Down	Will be staffed	Will be staffed	Will be staffed	
Other Support	Will be staffed	Will be staffed	Will be staffed	
LU Storm Room Status	N/A	N/A	N/A	
LU Municipal Room Status	Closed	Open		Salem Storm room will be staffed 7 am to 7 pm for the weekend. Overnight coverage will be handled by Dispatch.
Customer Outage Count	0	3,400	0	We are having some IT issues with our OMS system and the customer facing map is inaccurate. We continue to make progress and our customer count is much lower than showing.
Estimated Date/Time for Total Restoration	N/A	N/A	N/A	We remain working around the clock to restore as many customers as possible by 6:00 PM Sunday.
Planned Storm Conference Calls	Next Call at 4:00 pm 3/7/18 Next Call at 10:00 am 3/8/18 Next Call at 4:00 pm 3/8/18 Next call at 10:00 am 3/9/18 Next Call at 4:00 pm 3/9/18 Next Call at 10:00 am 3/10/18 Next Call at 4:00 pm 3/10/18			
Notifications with Regulators. NHPUC/NH OEM	Planning Report			

All wires down and support staff will be staffed 24/7 for the duration of event. Customer service will also be staffed 24/7 for the duration of the storm and restoration. We are increasing our damage assessment personnel.

4 Eversource
6 Unitil
4 Green Mountain
6 Canadian Crews

EII Event Index & Storm Accounting

Description	GP Expense Job	GP VM Job
EII – Level 3/4 High Confidence	STORM-EXP-1807	STORM-VGMT-1807

DATE: Saturday, March 10, 2018
TIME: 4:00 PM Winter Storm Quinn

	Lebanon	Salem	Charlestown	Comments
Weather Forecast	Fair weather with possible light flurries this afternoon.	Fair weather with possible light flurries this afternoon	Fair weather with possible light flurries this afternoon	Next chance for a snow event is Tuesday Evening. Medium confidence at this time for >6" in Charlestown/Lebanon and >8" in Salem area.
Anticipated EERP Event Type	Type 1	Type 1	Type 1	
Resources - *only 9 internal crews due to vacancies and injuries/light duty.				**Totals**
Internal Crews		5.5		5.5
Contractor Crews		22		22
Total Line Crews available		27.5		27.5
Tree Crews		21		21
Wires Down	Will be staffed	Will be staffed	Will be staffed	
Other Support	Will be staffed	Will be staffed	Will be staffed	
LU Storm Room Status	N/A	N/A	N/A	
LU Municipal Room Status	Closed	Open		Salem Storm room will be staffed 7 am to 7 pm for the weekend. Overnight coverage will be handled by Dispatch.
Customer Outage Count	0	1,584	0	We are having some IT issues with our OMS system and the customer facing map is inaccurate. We continue to make progress and our customer count is much lower than showing.
Estimated Date/Time for Total Restoration	N/A	N/A	N/A	We remain working around the clock to restore as many customers as possible by 6:00 PM Sunday.
Planned Storm Conference Calls	Next Call at 4:00 pm 3/7/18 Next Call at 10:00 am 3/8/18 Next Call at 4:00 pm 3/8/18 Next call at 10:00 am 3/9/18 Next Call at 4:00 pm 3/9/18 Next Call at 10:00 am 3/10/18 Next Call at 4:00 pm 3/10/18 Next Call 10:00 am 3/11/18			
Notifications with Regulators. NHPUC/NH OEM	Planning Report			

All wires down and support staff will be staffed 24/7 for the duration of event. Customer service will also be staffed 24/7 for the duration of the storm and restoration. We are increasing our damage assessment personnel.

4 Eversource
6 O'Donnell
4 Green Mountain

EII Event Index & Storm Accounting

Description	GP Expense Job	GP VM Job
EII – Level 3/4 High Confidence	STORM-EXP-1807	STORM-VGMT-1807

DATE: Sunday, March 11, 2018
TIME: 10:00 AM Winter Storm Quinn

	Lebanon	Salem	Charlestown	Comments
Weather Forecast	Fair weather with possible light flurries this afternoon.	Fair weather with possible light flurries this afternoon	Fair weather with possible light flurries this afternoon	Next chance for a snow event is Tuesday Evening. Medium confidence at this time for >6" in Charlestown/Lebanon and >8" in Salem area.
Anticipated EERP Event Type	Type 1	Type 1	Type 1	
Resources - *only 9 internal crews due to vacancies and injuries/light duty.				**Totals**
Internal Crews		5.5		5.5
Contractor Crews		22		22
Total Line Crews available		27.5		27.5
Tree Crews		21		21
Wires Down	Will be staffed	Will be staffed	Will be staffed	
Other Support	Will be staffed	Will be staffed	Will be staffed	
LU Storm Room Status	N/A	N/A	N/A	
LU Municipal Room Status	Closed	Open		Salem Storm room will be staffed 7 am to 7 pm for the weekend. Overnight coverage will be handled by Dispatch.
Customer Outage Count	0	100	0	We are having some IT issues with our OMS system and the customer facing map is inaccurate. We continue to make progress and our customer count is much lower than showing.
Estimated Date/Time for Total Restoration	N/A	N/A	N/A	We remain working around the clock to restore as many customers as possible by 6:00 PM Sunday.
Planned Storm Conference Calls	Next Call at 4:00 pm 3/7/18 Next Call at 10:00 am 3/8/18 Next Call at 4:00 pm 3/8/18 Next call at 10:00 am 3/9/18 Next Call at 4:00 pm 3/9/18 Next Call at 10:00 am 3/10/18 Next Call at 4:00 pm 3/10/18 Next Call 10:00 am 3/11/18 – Final Call for Quinn			
Notifications with Regulators. NHPUC/NH OEM	Planning Report			

All wires down and support staff will be staffed 24/7 for the duration of event. Customer service will also be staffed 24/7 for the duration of the storm and restoration. We are increasing our damage assessment personnel.

4 Eversource
6 O'Donnell
4 Green Mountain

EII Event Index & Storm Accounting

Description	GP Expense Job	GP VM Job
EII – Level 3/4 High Confidence	STORM-EXP-1807	STORM-VGMT-1807

DATE: Sunday, March 11, 2018
TIME: Winter Storm Quinn

	Lebanon	Salem	Charlestown	Comments
Weather Forecast	Fair weather with possible light flurries this afternoon.	Fair weather with possible light flurries this afternoon	Fair weather with possible light flurries this afternoon	Next chance for a snow event is Tuesday Evening. Medium confidence at this time for >6" in Charlestown/Lebanon and >8" in Salem area.
Anticipated EERP Event Type	Type 1	Type 1	Type 1	
Resources - *only 9 internal crews due to vacancies and injuries/light duty.				**Totals**
Internal Crews		5.5		5.5
Contractor Crews				
Total Line Crews available				
Tree Crews				
Wires Down	Will be staffed	Will be staffed	Will be staffed	
Other Support	Will be staffed	Will be staffed	Will be staffed	
LU Storm Room Status	N/A	N/A	N/A	
LU Municipal Room Status	Closed	Closed		
Customer Outage Count	0	0	0	
Estimated Date/Time for Total Restoration	N/A	N/A	N/A	We have completed restoration to our customers.
Planned Storm Conference Calls	Next Call at 4:00 pm 3/7/18 Next Call at 10:00 am 3/8/18 Next Call at 4:00 pm 3/8/18 Next call at 10:00 am 3/9/18 Next Call at 4:00 pm 3/9/18 Next Call at 10:00 am 3/10/18 Next Call at 4:00 pm 3/10/18 Next Call 10:00 am 3/11/18 – Final Call for Quinn			
Notifications with Regulators. NHPUC/NH OEM	Planning Report			
EII Event Index & Storm Accounting	Description	GP Expense Job	GP VM Job	
	EII – Level 3/4 High Confidence	STORM-EXP-1807	STORM-VGMT-1807	

@17:30 the Salem Storm closed. All dispatching duties have been switched to Londonderry. There will be crews on property for the evening/over night shift if needed.

Customer service was released at 1:00 PM Sunday.

Appendix *D*

NH PUC E-33 Forms

NEW HAMPSHIRE PUBLIC UTILITIES COMMISSION
DISTRIBUTION CREW REPORT
(In compliance with Puc 308.14)

	EVENT NAME		Winter Storm Quinn				
	DATE REPORT SUBMITTED:		03/08/18	TIME - DATA EXTRACTED:		10:00 AM	
	Submitted by:		Chuck Rodrigues				
	Company:		Liberty Utilities				
Quantity of Field Personnel					Prior to Event[A]	During Event	Incremental
			FRONT LINE				
1	**Distribution** 69 KV and Less includes Subtransmission 46kv, 34.5kv,22kv, 13kv, 7.5 kv, 4kv, 2kv and below	Line	Company Line Crews restoring Distribution Circuits		9	9	0
			Affiliate Co Line Crews restoring Distribution Circuits		0	0	0
			Contractor Line Crews restoring Distribution Circuits		2	8	6
			Foreign Utility Line Crews restoring Distribution Circuits		0	0	0
		Service	Company Line Crews restoring Service		0	0	0
			Contractors restoring Service *includes Electricans*		0	0	0
		Pole[B]	Pole Setting/Digging Operations *includes Co, Foreign Uitlity, Contractor*		3	5	2
		Tree	Contractor Tree Clearing - Working on Distribution Circuits		10	12	2
			Foreign Utility Tree Clearing - Working on Distribution Circuits		0	0	0
				SUBTOTAL	24	34	10
			FIELD ASSESSMENT				
2	Distribution *see above*	Line[C]	Company Damage Assessment Personnel		0	12	12
				SUBTOTAL	0	12	12
			PUBLIC SAFETY				
3	Wires Down Appraiser	Line	Company Personnel		0	3	3
	Field Guides		Bird Dogs, Location Guides			0	0
	Other Support		*includes contractors*				0
				SUBTOTAL	0	3	3
				GRAND TOTAL	24	49	25

NEW HAMPSHIRE PUBLIC UTILITIES COMMISSION
DISTRIBUTION CREW REPORT
(In compliance with Puc 308.14)

	EVENT NAME		Winter Storm Quinn				
	DATE REPORT SUBMITTED:		03/08/18	TIME - DATA EXTRACTED:		2:00 p.m.	
	Submitted by:		Chuck Rodrigues				
	Company:		Liberty Utilities				
Quantity of Field Personnel					Prior to Event[A]	During Event	Incremental
			FRONT LINE				
1	**Distribution** 69 KV and Less includes Subtransmission 46kv, 34.5kv,22kv, 13kv, 7.5 kv, 4kv, 2kv and below	Line	Company Line Crews restoring Distribution Circuits		9	9	0
			Affiliate Co Line Crews restoring Distribution Circuits		0	0	0
			Contractor Line Crews restoring Distribution Circuits		2	8	6
			Foreign Utility Line Crews restoring Distribution Circuits		0	0	0
		Service	Company Line Crews restoring Service		0	0	0
			Contractors restoring Service *includes Electricans*		0	0	0
		Pole[B]	Pole Setting/Digging Operations *includes Co, Foreign Uitlity, Contractor*		3	5	2
		Tree	Contractor Tree Clearing - Working on Distribution Circuits		10	12	2
			Foreign Utility Tree Clearing - Working on Distribution Circuits		0	0	0
				SUBTOTAL	24	34	10
			FIELD ASSESSMENT				
2	Distribution *see above*	Line[C]	Company Damage Assessment Personnel		0	12	12
				SUBTOTAL	0	12	12
			PUBLIC SAFETY				
3	Wires Down Appraiser	Line	Company Personnel		0	9	9
	Field Guides		Bird Dogs, Location Guides			0	0
	Other Support		*includes contractors*				0
				SUBTOTAL	0	9	9
				GRAND TOTAL	24	55	31

NEW HAMPSHIRE PUBLIC UTILITIES COMMISSION
DISTRIBUTION CREW REPORT
(In compliance with Puc 308.14)

	EVENT NAME		Winter Storm Quinn				
	DATE REPORT SUBMITTED:		03/08/18	TIME - DATA EXTRACTED:		6:00 p.m.	
	Submitted by:		Chuck Rodrigues				
	Company:		Liberty Utilities				
Quantity of Field Personnel					Prior to Event[A]	During Event	Incremental
			FRONT LINE				
1	**Distribution** 69 KV and Less includes Subtransmission 46kv, 34.5kv,22kv, 13kv, 7.5 kv, 4kv, 2kv and below	Line	Company Line Crews restoring Distribution Circuits		9	9	0
			Affiliate Co Line Crews restoring Distribution Circuits		0	0	0
			Contractor Line Crews restoring Distribution Circuits		2	11	9
			Foreign Utility Line Crews restoring Distribution Circuits		0	0	0
		Service	Company Line Crews restoring Service		0	0	0
			Contractors restoring Service *includes Electricans*		0	0	0
		Pole[B]	Pole Setting/Digging Operations *includes Co, Foreign Uitlity, Contractor*		3	3	0
		Tree	Contractor Tree Clearing - Working on Distribution Circuits		10	21	11
			Foreign Utility Tree Clearing - Working on Distribution Circuits		0	0	0
				SUBTOTAL	24	44	20
			FIELD ASSESSMENT				
2	Distribution *see above*	Line[C]	Company Damage Assessment Personnel		0	2	2
				SUBTOTAL	0	2	2
			PUBLIC SAFETY				
3	Wires Down Appraiser Field Guides Other Support	Line	Company Personnel		0	6	6
			Bird Dogs, Location Guides			0	0
			includes contractors				0
				SUBTOTAL	0	6	6
				GRAND TOTAL	24	52	28

NEW HAMPSHIRE PUBLIC UTILITIES COMMISSION
DISTRIBUTION CREW REPORT
(In compliance with Puc 308.14)

	EVENT NAME		Winter Storm Quinn				
	DATE REPORT SUBMITTED:		4316800%	TIME - DATA EXTRACTED:		6:00 a.m.	
	Submitted by:		Chuck Rodrigues				
	Company:		Liberty Utilities				
Quantity of Field Personnel					Prior to Event[A]	During Event	Incremental
			FRONT LINE				
100%	**Distribution** 69 KV and Less includes Subtransmission 46kv, 34.5kv,22kv, 13kv, 7.5 kv, 4kv, 2kv and below	Line	Company Line Crews restoring Distribution Circuits		900%	900%	0%
			Affiliate Co Line Crews restoring Distribution Circuits		0%	0%	0%
			Contractor Line Crews restoring Distribution Circuits		200%	800%	600%
			Foreign Utility Line Crews restoring Distribution Circuits		0%	0%	0%
		Service	Company Line Crews restoring Service		0%	0%	0%
			Contractors restoring Service *includes Electricans*		0%	0%	0%
		Pole[B]	Pole Setting/Digging Operations *includes Co, Foreign Uitlity, Contractor*		300%	300%	0%
		Tree	Contractor Tree Clearing - Working on Distribution Circuits		1000%	2100%	1100%
			Foreign Utility Tree Clearing - Working on Distribution Circuits		0%	0%	0%
				SUBTOTAL	2400%	4100%	1700%
			FIELD ASSESSMENT				
200%	Distribution *see above*	Line[C]	Company Damage Assessment Personnel		0%	200%	200%
				SUBTOTAL	0%	200%	200%
			PUBLIC SAFETY				
300%	Wires Down Appraiser Field Guides Other Support	Line	Company Personnel		0%	600%	600%
			Bird Dogs, Location Guides			0%	0%
			includes contractors				0%
				SUBTOTAL	0%	600%	600%
				GRAND TOTAL	2400%	4900%	2500%

NEW HAMPSHIRE PUBLIC UTILITIES COMMISSION
DISTRIBUTION CREW REPORT
(In compliance with Puc 308.14)

	EVENT NAME		Winter Storm Quinn				
	DATE REPORT SUBMITTED:		03/09/18	TIME - DATA EXTRACTED:		10:00 AM	
	Submitted by:		Heather Tebbetts				
	Company:		Liberty Utilities				
Quantity of Field Personnel					Prior to Event[A]	During Event	Incremental
			FRONT LINE				
1	**Distribution** 69 KV and Less includes Subtransmission 46kv, 34.5kv,22kv, 13kv, 7.5 kv, 4kv, 2kv and below	Line	Company Line Crews restoring Distribution Circuits		9	9	0
			Affiliate Co Line Crews restoring Distribution Circuits		0	0	0
			Contractor Line Crews restoring Distribution Circuits		2	12	10
			Foreign Utility Line Crews restoring Distribution Circuits		0	0	0
		Service	Company Line Crews restoring Service		0	0	0
			Contractors restoring Service *includes Electricans*		0	0	0
		Pole[B]	Pole Setting/Digging Operations *includes Co, Foreign Uitlity, Contractor*		3	3	0
		Tree	Contractor Tree Clearing - Working on Distribution Circuits		10	21	11
			Foreign Utility Tree Clearing - Working on Distribution Circuits		0	0	0
				SUBTOTAL	24	45	21
			FIELD ASSESSMENT				
2	Distribution *see above*	Line[C]	Company Damage Assessment Personnel		0	2	2
				SUBTOTAL	0	2	2
			PUBLIC SAFETY				
3	Wires Down Appraiser Field Guides Other Support	Line	Company Personnel		0	6	6
			Bird Dogs, Location Guides			0	0
			includes contractors				0
				SUBTOTAL	0	6	6
				GRAND TOTAL	24	53	29

NEW HAMPSHIRE PUBLIC UTILITIES COMMISSION
DISTRIBUTION CREW REPORT
(In compliance with Puc 308.14)

	EVENT NAME		Winter Storm Quinn				
	DATE REPORT SUBMITTED:		03/09/18	TIME - DATA EXTRACTED:		2:00 PM	
	Submitted by:		Heather Tebbetts				
	Company:		Liberty Utilities				
Quantity of Field Personnel					Prior to Event[A]	During Event	Incremental
			FRONT LINE				
1	**Distribution** 69 KV and Less includes Subtransmission 46kv, 34.5kv,22kv, 13kv, 7.5 kv, 4kv, 2kv and below	Line	Company Line Crews restoring Distribution Circuits		9	9	0
			Affiliate Co Line Crews restoring Distribution Circuits		0	0	0
			Contractor Line Crews restoring Distribution Circuits		2	17	15
			Foreign Utility Line Crews restoring Distribution Circuits		0	0	0
		Service	Company Line Crews restoring Service		0	0	0
			Contractors restoring Service *includes Electricans*		0	0	0
		Pole[B]	Pole Setting/Digging Operations *includes Co, Foreign Uitlity, Contractor*		3	3	0
		Tree	Contractor Tree Clearing - Working on Distribution Circuits		10	21	11
			Foreign Utility Tree Clearing - Working on Distribution Circuits		0	0	0
				SUBTOTAL	24	50	26
			FIELD ASSESSMENT				
2	Distribution *see above*	Line[C]	Company Damage Assessment Personnel		0	2	2
				SUBTOTAL	0	2	2
			PUBLIC SAFETY				
3	Wires Down Appraiser Field Guides Other Support	Line	Company Personnel		0	6	6
			Bird Dogs, Location Guides			0	0
			includes contractors				0
				SUBTOTAL	0	6	6
				GRAND TOTAL	24	58	34

NEW HAMPSHIRE PUBLIC UTILITIES COMMISSION
DISTRIBUTION CREW REPORT
(In compliance with Puc 308.14)

	EVENT NAME		Winter Storm Quinn				
	DATE REPORT SUBMITTED:		03/10/18	TIME - DATA EXTRACTED:		10:00 AM	
	Submitted by:		Heather Tebbetts				
	Company:		Liberty Utilities				
Quantity of Field Personnel					Prior to Event[A]	During Event	Incremental
			FRONT LINE				
1	**Distribution** 69 KV and Less includes Subtransmission 46kv, 34.5kv,22kv, 13kv, 7.5 kv, 4kv, 2kv and below	Line	Company Line Crews restoring Distribution Circuits		9	5.5	-3.5
			Affiliate Co Line Crews restoring Distribution Circuits		0	0	0
			Contractor Line Crews restoring Distribution Circuits		2	23	21
			Foreign Utility Line Crews restoring Distribution Circuits		0	0	0
		Service	Company Line Crews restoring Service		0	0	0
			Contractors restoring Service *includes Electricans*		0	0	0
		Pole[B]	Pole Setting/Digging Operations *includes Co, Foreign Uitlity, Contractor*		3	3	0
		Tree	Contractor Tree Clearing - Working on Distribution Circuits		10	21	11
			Foreign Utility Tree Clearing - Working on Distribution Circuits		0	0	0
				SUBTOTAL	24	52.5	28.5
			FIELD ASSESSMENT				
2	Distribution *see above*	Line[C]	Company Damage Assessment Personnel		0	6	6
				SUBTOTAL	0	6	6
			PUBLIC SAFETY				
3	Wires Down Appraiser Field Guides Other Support	Line	Company Personnel		0	6	6
			Bird Dogs, Location Guides			0	0
			includes contractors				0
				SUBTOTAL	0	6	6
				GRAND TOTAL	24	64.5	40.5

NEW HAMPSHIRE PUBLIC UTILITIES COMMISSION
DISTRIBUTION CREW REPORT
(In compliance with Puc 308.14)

	EVENT NAME		Winter Storm Quinn				
	DATE REPORT SUBMITTED:		03/10/18	TIME - DATA EXTRACTED:		6:00 AM	
	Submitted by:		Heather Tebbetts				
	Company:		Liberty Utilities				
Quantity of Field Personnel					Prior to Event[A]	During Event	Incremental
			FRONT LINE				
1	**Distribution** 69 KV and Less includes Subtransmission 46kv, 34.5kv,22kv, 13kv, 7.5 kv, 4kv, 2kv and below	Line	Company Line Crews restoring Distribution Circuits		9	5.5	-3.5
			Affiliate Co Line Crews restoring Distribution Circuits		0	0	0
			Contractor Line Crews restoring Distribution Circuits		2	17	15
			Foreign Utility Line Crews restoring Distribution Circuits		0	0	0
		Service	Company Line Crews restoring Service		0	0	0
			Contractors restoring Service *includes Electricans*		0	0	0
		Pole[B]	Pole Setting/Digging Operations *includes Co, Foreign Uitlity, Contractor*		3	3	0
		Tree	Contractor Tree Clearing - Working on Distribution Circuits		10	21	11
			Foreign Utility Tree Clearing - Working on Distribution Circuits		0	0	0
				SUBTOTAL	24	46.5	22.5
			FIELD ASSESSMENT				
2	Distribution *see above*	Line[C]	Company Damage Assessment Personnel		0	2	2
				SUBTOTAL	0	2	2
			PUBLIC SAFETY				
3	Wires Down Appraiser Field Guides Other Support	Line	Company Personnel		0	6	6
			Bird Dogs, Location Guides			0	0
			includes contractors				0
				SUBTOTAL	0	6	6
				GRAND TOTAL	24	54.5	30.5

NEW HAMPSHIRE PUBLIC UTILITIES COMMISSION
DISTRIBUTION CREW REPORT
(In compliance with Puc 308.14)

	EVENT NAME		Winter Storm Quinn				
	DATE REPORT SUBMITTED:		03/09/18	TIME - DATA EXTRACTED:		6:00 PM	
	Submitted by:		Heather Tebbetts				
	Company:		Liberty Utilities				
Quantity of Field Personnel					Prior to Event[A]	During Event	Incremental
			FRONT LINE				
1	**Distribution** 69 KV and Less includes Subtransmission 46kv, 34.5kv,22kv, 13kv, 7.5 kv, 4kv, 2kv and below	Line	Company Line Crews restoring Distribution Circuits		9	9	0
			Affiliate Co Line Crews restoring Distribution Circuits		0	0	0
			Contractor Line Crews restoring Distribution Circuits		2	17	15
			Foreign Utility Line Crews restoring Distribution Circuits		0	0	0
		Service	Company Line Crews restoring Service		0	0	0
			Contractors restoring Service *includes Electricans*		0	0	0
		Pole[B]	Pole Setting/Digging Operations *includes Co, Foreign Uitlity, Contractor*		3	3	0
		Tree	Contractor Tree Clearing - Working on Distribution Circuits		10	21	11
			Foreign Utility Tree Clearing - Working on Distribution Circuits		0	0	0
				SUBTOTAL	24	50	26
			FIELD ASSESSMENT				
2	Distribution *see above*	Line[C]	Company Damage Assessment Personnel		0	2	2
				SUBTOTAL	0	2	2
			PUBLIC SAFETY				
3	Wires Down Appraiser Field Guides Other Support	Line	Company Personnel		0	6	6
			Bird Dogs, Location Guides			0	0
			includes contractors				0
				SUBTOTAL	0	6	6
				GRAND TOTAL	24	58	34

NEW HAMPSHIRE PUBLIC UTILITIES COMMISSION
DISTRIBUTION CREW REPORT
(In compliance with Puc 308.14)

	EVENT NAME		Winter Storm Quinn				
	DATE REPORT SUBMITTED:		03/10/18	TIME - DATA EXTRACTED:		2:00 PM	
	Submitted by:		Heather Tebbetts				
	Company:		Liberty Utilities				
Quantity of Field Personnel					Prior to Event[A]	During Event	Incremental
			FRONT LINE				
1	**Distribution** 69 KV and Less includes Subtransmission 46kv, 34.5kv,22kv, 13kv, 7.5 kv, 4kv, 2kv and below	Line	Company Line Crews restoring Distribution Circuits		9	5.5	-3.5
			Affiliate Co Line Crews restoring Distribution Circuits		0	0	0
			Contractor Line Crews restoring Distribution Circuits		2	23	21
			Foreign Utility Line Crews restoring Distribution Circuits		0	0	0
		Service	Company Line Crews restoring Service		0	0	0
			Contractors restoring Service *includes Electricans*		0	0	0
		Pole[B]	Pole Setting/Digging Operations *includes Co, Foreign Uitlity, Contractor*		3	3	0
		Tree	Contractor Tree Clearing - Working on Distribution Circuits		10	21	11
			Foreign Utility Tree Clearing - Working on Distribution Circuits		0	0	0
				SUBTOTAL	24	52.5	28.5
			FIELD ASSESSMENT				
2	Distribution *see above*	Line[C]	Company Damage Assessment Personnel		0	6	6
				SUBTOTAL	0	6	6
			PUBLIC SAFETY				
3	Wires Down Appraiser Field Guides Other Support	Line	Company Personnel		0	6	6
			Bird Dogs, Location Guides			0	0
			includes contractors				0
				SUBTOTAL	0	6	6
				GRAND TOTAL	24	64.5	40.5

NEW HAMPSHIRE PUBLIC UTILITIES COMMISSION
DISTRIBUTION CREW REPORT
(In compliance with Puc 308.14)

	EVENT NAME		Winter Storm Quinn				
	DATE REPORT SUBMITTED:		03/11/18	TIME - DATA EXTRACTED:		6:00 AM	
	Submitted by:		Heather Tebbetts				
	Company:		Liberty Utilities				
Quantity of Field Personnel					Prior to Event[A]	During Event	Incremental
			FRONT LINE				
1	**Distribution** 69 KV and Less includes Subtransmission 46kv, 34.5kv,22kv, 13kv, 7.5 kv, 4kv, 2kv and below	Line	Company Line Crews restoring Distribution Circuits		9	5.5	-3.5
			Affiliate Co Line Crews restoring Distribution Circuits		0	0	0
			Contractor Line Crews restoring Distribution Circuits		2	23	21
			Foreign Utility Line Crews restoring Distribution Circuits		0	0	0
		Service	Company Line Crews restoring Service		0	0	0
			Contractors restoring Service *includes Electricans*		0	0	0
		Pole[B]	Pole Setting/Digging Operations *includes Co, Foreign Uitlity, Contractor*		3	3	0
		Tree	Contractor Tree Clearing - Working on Distribution Circuits		10	21	11
			Foreign Utility Tree Clearing - Working on Distribution Circuits		0	0	0
				SUBTOTAL	24	52.5	28.5
			FIELD ASSESSMENT				
2	Distribution *see above*	Line[C]	Company Damage Assessment Personnel		0	6	6
				SUBTOTAL	0	6	6
			PUBLIC SAFETY				
3	Wires Down Appraiser	Line	Company Personnel		0	6	6
	Field Guides		Bird Dogs, Location Guides			0	0
	Other Support		*includes contractors*				0
				SUBTOTAL	0	6	6
				GRAND TOTAL	24	64.5	40.5

NEW HAMPSHIRE PUBLIC UTILITIES COMMISSION
DISTRIBUTION CREW REPORT
(In compliance with Puc 308.14)

	EVENT NAME		Winter Storm Quinn				
	DATE REPORT SUBMITTED:		03/10/18	TIME - DATA EXTRACTED:		6:00 PM	
	Submitted by:		Heather Tebbetts				
	Company:		Liberty Utilities				
Quantity of Field Personnel					Prior to Event[A]	During Event	Incremental
			FRONT LINE				
1	**Distribution** 69 KV and Less includes Subtransmission 46kv, 34.5kv,22kv, 13kv, 7.5 kv, 4kv, 2kv and below	Line	Company Line Crews restoring Distribution Circuits		9	5.5	-3.5
			Affiliate Co Line Crews restoring Distribution Circuits		0	0	0
			Contractor Line Crews restoring Distribution Circuits		2	23	21
			Foreign Utility Line Crews restoring Distribution Circuits		0	0	0
		Service	Company Line Crews restoring Service		0	0	0
			Contractors restoring Service *includes Electricans*		0	0	0
		Pole[B]	Pole Setting/Digging Operations *includes Co, Foreign Uitlity, Contractor*		3	3	0
		Tree	Contractor Tree Clearing - Working on Distribution Circuits		10	21	11
			Foreign Utility Tree Clearing - Working on Distribution Circuits		0	0	0
				SUBTOTAL	24	52.5	28.5
			FIELD ASSESSMENT				
2	Distribution *see above*	Line[C]	Company Damage Assessment Personnel		0	6	6
				SUBTOTAL	0	6	6
			PUBLIC SAFETY				
3	Wires Down Appraiser	Line	Company Personnel		0	6	6
	Field Guides		Bird Dogs, Location Guides			0	0
	Other Support		*includes contractors*				0
				SUBTOTAL	0	6	6
				GRAND TOTAL	24	64.5	40.5

NEW HAMPSHIRE PUBLIC UTILITIES COMMISSION
DISTRIBUTION CREW REPORT
(In compliance with Puc 308.14)

EVENT NAME	Winter Storm Quinn		
DATE REPORT SUBMITTED:	03/11/18	TIME - DATA EXTRACTED:	10:00 AM
Submitted by:	Heather Tebbetts		
Company:	Liberty Utilities		

Quantity of Field Personnel

					Prior to Event[A]	During Event	Incremental
			FRONT LINE				
1	**Distribution** 69 KV and Less includes Subtransmission 46kv, 34.5kv,22kv, 13kv, 7.5 kv, 4kv, 2kv and below	Line	Company Line Crews restoring Distribution Circuits		9	5.5	-3.5
			Affiliate Co Line Crews restoring Distribution Circuits		0	0	0
			Contractor Line Crews restoring Distribution Circuits		2	23	21
			Foreign Utility Line Crews restoring Distribution Circuits		0	0	0
		Service	Company Line Crews restoring Service		0	0	0
			Contractors restoring Service *includes Electricans*		0	0	0
		Pole[B]	Pole Setting/Digging Operations *includes Co, Foreign Uitlity, Contractor*		3	3	0
		Tree	Contractor Tree Clearing - Working on Distribution Circuits		10	21	11
			Foreign Utility Tree Clearing - Working on Distribution Circuits		0	0	0
				SUBTOTAL	24	52.5	28.5
			FIELD ASSESSMENT				
2	Distribution *see above*	Line[C]	Company Damage Assessment Personnel		0	4	4
				SUBTOTAL	0	4	4
			PUBLIC SAFETY				
3	Wires Down Appraiser Field Guides Other Support	Line	Company Personnel		0	7	7
			Bird Dogs, Location Guides			0	0
			includes contractors				0
				SUBTOTAL	0	7	7
				GRAND TOTAL	24	63.5	39.5

THIS PAGE INTENTIONALLY LEFT BLANK

Appendix *E*

Storm Call Documents

Liberty Utilities

Meeting Agenda – Prior to Event

Event Name: **Meeting Number:**
Meeting Date: **Meeting Time:**
Meeting Host: Form Revised on March 5, 2018

President	Susan Fleck			
Vice-President	Craig Jennings			
Assignments – Incident Command System	**Primary**	**Attend**	**Secondary**	**Attend**
1. Incident Commander	Anthony Strabone		Mark Parker	
2a.Regional Commander-Salem	Ryan Tsantoulis			
2b.Regional Commander-Lebanon	Travis Singer			
3. Resource Officer	Heather Tebbetts		Steve Hall	
4. Logistics Officer	Rich Foley		Phyllis Chopelas	
5. Financial Officer	Tisha Sanderson		Cynthia Trottier	
6. Human Resource Officer	Lori Oliveira		John Sanabria	
7. Liaison Officer	Michael Licata		Huck Montgomery	
8. Information Officer	John Shore			
9. System Control Center	Norm Gallagher		Kathy Kelley	
10 Customer Call Center	Christine Downing		Nicole Harris	
11.Data Collection Officer	Leo Cody			
12.Gas Operations	Rich MacDonald		Bob Mostone	
13.IT Coordinator	Don Romano		David Chung	
14.Safety & Health Officer	Kevin Spottiswood		Rich Paradie	
15.Environment Officer	Mary Casey		Rich Paradie	
16.Security/Facilities Officer	Doug Dorn		Shawn Raleigh	
Assignments - System Wide				
18.Municipal Room Coordinator	Jill Fitzpatrick		Lisa DeGregory	
19.Wires Down Office Support	Jennifer Figueroa		Tedd Cluff	
20.Wires Down Field Assessor	Kevin Hollins		Chuck Jones	
21.Damage Assessment	David Lepie		Chuck Rodrigues	
22.Tree Crew/Forestry Coordinator	Jeff Carney			
23.OnBoarding Contractors	Rich Paradie		Ken Salter	
24.Field Guide Mutual Aid Contractors	Bob Johnson		Ken Salter	
25.Service Restoration Coordinator	Joel Rivera			
26.Substations	Mario Barone			
Assignments - Salem				
17.Electric Operations Supervisor	Ryan Tsantoulis			
On-Call Supervisor				
Assignments - Lebanon				
17.Electric Operations Supervisor	Travis Singer			
On-Call Supervisor				
Assignments - Miscellaneous				
Customer Service	Mercedes Grenier		Kristen Lange	
Electric Control	Emily Backels			
Emergency Management	Mark Eagan			
Engineering	Chuck Rodrigues			
Procurement	Dana Rogers			
Training	Ken Salter			

SAFETY MESSAGE

WEATHER

A. Current Weather Report

A. Source:
B. Time:
C. Description:

B. Current Weather Scenarios

A. Best Case:
B. Worse Case:
C. Most Likely Case:

C. Energy Event Index Forecast

A. Event Level:
B. Confidence Level:

Energy Event Index Definition

No Leaves (Nov 1 - Mar 31)

EEI	Wind Speed	Wind/Gust	Snow	Ice
1	< 40 mph	< 45 mph	< 6 in.	< 1/10 in.
2	>= 40 mph	>= 45 mph	>= 6 in.	>= 1/10 in.
3	>= 50 mph	>= 55 mph	>= 8 in.	>= 3/8 in.
4	>= 60 mph	>= 70 mph	>= 12 in.	>= 1/2 in.
5	>= 70 mph	>= 85 mph	>= 24 in.	>= 1 in.

Confidence Level	
Low	<30% chance the most likely EEI level remains at that level through the event
Medium	30-60% chance the most likely EEI level remains at that level through the event
High	>=60% chance the most likely EEI level remains at that level through the event

*Note: Confidence is NOT a measure of probability of an event occurring; That information can be found in the text product. Confidence is a measure of how likely the forecast EEI level will stay at that level from now through the event, or a way to measure the potential for variability in the forecast. So for example, if it is Monday and there are EEI-2 gusts forecast on Wednesday with high confidence it means the following: There is a >=60% chance the most likely forecasted gusts will remain EEI-2 with all updates from now through Wednesday.

Action Items:

SITUATION ASSESSMENT

1. **Has the Director of Electric Operations declared that the Company is in Storm Preparation mode?**
   Yes ☐ No ☐
   A. Date:
   B. Time:

2. **Expected Event Type As Of Meeting Time**
   (Note: See Attachment 1)
   A. Best Case: Choose an item.
      Customers Impacted -
   B. Worse Case: Choose an item.
      Customers Impacted -
   C. Most Likely Case: Choose an item.
      Customers Impacted –

3. **Expected Event Impact As Of Meeting Time**
   A. Impact Date: Click here to enter a date.
   B. Impact Time:
   C. Impact Duration:
   D. Impact Location
   E. Impact Description:

4. **Will the Event occur during a Holiday or over a Weekend?**

5. **Does the NHPUC Safety Division anticipate a Wide-Scale Emergency?**
   Has the NHPUC notified Liberty Utilities?

   Has the NHPUC named the Event per Puc 307.08 (c)?

   (Note: Puc 302:24 defines "Wide-Scale Emergency" as an event that is an event which results in, or is or expected to result in:
   (a) a sustained interruption of electric service to 10% or more of Liberty Utilities customers and restoration of electric service to any of these customers takes more than 24 hours; or
   (b) the federal, state or local government declaring an official state of emergency in Liberty Utilities service territory and the emergency involves an interruption of electric service.)

6. **Are there any Abnormal Conditions currently on the Electric Distribution System that need to be addressed before the Event?**

Action Items:

RESOURCE REQUIREMENTS

Notes: A crew generally consists of two people (2 FTEs) with a truck and equipment.
Line Crews: Responsible for switching and repair of equipment and hardware and the final energizing of the line.
Digger Crews: Responsible for replacing utility poles.
Tree Crews: Responsible for removing and relocation of downed trees and limbs to eliminate safety hazards.
On Property Crews: Outside contractor crews currently working in state for Liberty Utilities at the time of the event.
Foreign Crews / Mutual Aid Crews: Outside company or contractor crews requested by LU through NAMAG.

1. Expected Company Resources Required to Restore Electric Service As Of Meeting Time
(Liberty Utilities Blue Sky staffing level is 13 crews.)

	Lebanon	Salem	Charlestown	Londonderry	Total
LU Line Crews					
On Property Line Crews					
Additional Contractor Line Crews					
LU Tree Crews					
Troubleshooters					
On Property Tree Crews					
Additional Contractor Tree Crews					
On Property Digger Crews					
Additional Contractor Digger Crews					
Additional Electric Controllers					
Additional Electric Dispatchers					
Additional Customer Service Representatives					

Has the Company canceled vacation for employees?
Has the Company notified employees to be on standby?
Has the LIBERTY UTILITIES – ELECTRIC OPERATIONS ON-CALL SCHEDULE been issued?

2. Expected Foreign / Mutual Aid Resources Required to Restore Electric Service As Of Meeting Time

	Lebanon	Salem	Charlestown	Total
Foreign Line Crews				
Foreign Tree Crews				
Foreign Digger Crews				

3. North Atlantic Mutual Assistance Group (NAMAG)
Has Liberty Utilities initiated a Joint Mobilization Conference Call through NAMAG? _____
Has another operator initiated a Joint Mobilization Conference Call through NAMAG? _____
What is the Liberty Utilities status at the time of the meeting?
Holding _____ Who made the decision? _____
Requesting _____ Who made the decision? _____
Offering _____ Who made the decision? _____

Has Liberty Utilities requested assistance from neighboring utilities? _____
(See NAMAG exception to Rules of Engagement if a single impact for a short duration.)

4. Expected Outside Contractors Required to Perform Other Services As Of Meeting Time
Service: Snowplow
Contractor:
Contact:

Service:

Service: Food
Contractor:
Contact:

Service:

Action Items:

PRE-STAGING of CREWS, PERSONNEL and MATERIALS

Has the Company considered the need to pre-stage crews?
Who made the decision? When?

Date Pre-Staging is expected? Time?

	LU Contact	Lebanon	Salem	Charlestown
Crews				
Location				
Onboarding				
Field Guides				
Stand-By Personnel				
Tools, Equipment, Materials				
Security				
Meals				
Lodging				
Municipal Room				
Regional EOC				
Damage Assessment				

Action Items:

COMMUNICATIONS – Action Items

A. To Company Employees:
- Operations (Example: Use radio instead of cell phone.)

- Non Operations

B. To Governor / State Government / NH WebEOC:

C. To NHPUC Safety Division:

D. To Cities / Towns:
Are there any Storm Conference Calls scheduled:

E. To Customers / Critical Care Customers:

F. To Public:

G. To NAMAG & Other Industry Groups:

H. Other Pole Attachees:

REPORTS – Action Items

A. Prepare internal Storm Planning Report.

B. File Puc Form E-33 prior to the onset of any anticipated Wide-Scale Emergency.

C. Continue to prepare and file all other required reports.

ADMINISTRATION

A. Send all storm related information and documentation to "SM NH Storm Duty".
B. See CQ&EM folder on Liberty Utilities East site for Emergency Management Forms and Reports.
C. Planning and Preparation Activities Recoverable (if EEI Level 3 or greater with a High probability)
D. Storm/Event Accounting:

Description	GP Expense Job	GP Capital Job	GP VM Job
Storm Event EII Level			

Storm Contingency Fund (CFID 1748)

The Settlement in Docket No. DG 06-107, Exhibit GSE-7, approved by Order No. 24,777, calls for Granite State to establish a storm contingency fund. The fund would be used to pay for all of the operations and maintenance costs incurred by Granite State as the result of major storms. A major storm is defined as a severe weather event or events causing 30 concurrent troubles (i.e., interruption events occurring on either primary or secondary lines) and 15 percent of customers interrupted or 45 concurrent troubles.

The Settlement in Docket No. DE 13-063, approved in Order No. 25,738, entitles Liberty Utilities to recover certain costs if the weather forecast shows an EII Level of 3 or greater with a high probability of occurrence. The costs include pre-staging of crews, standby arrangements with external contractors, incremental compensation of employees, and other costs that may be incurred to prepare for a qualifying major storm.

INCIDENT COMMAND SYSTEM POSITIONS – Comments / Questions

1. Incident Commander:

2. On-Scene Commander / Regional Commander:

3. Resource Officer:

4. Logistics Officer:

5. Financial Officer:

6. Human Resources Officer:

7. Liaison Officer:

8. Information Officer:

9. System Control Center:

10. Customer Call Center:

11. Data Collection Officer:

12. Gas Operations:

13. IT Coordinator:

14. Safety & Health Officer:

15. Environment Officer:

16. Security/Facilities Officer:

Others:

NEXT MEETING

A. Date:
B. Time:
C. Location:
D. Liberty Storm Conference Call Number: **1-888-875-1833**
   Guest Passcode: **430980**
   Host Passcode: **4309805**

ATTACHMENT 1

The following are guidelines to determine the severity of Emergencies and their Operating Conditions for the Company.
The guidelines are intended to be consistent with Table 306-1 in NH Puc 306.09:

Emergency Response Standards and Electrical Outage Restoration

Type 5 **Small Impact Event** *(Localized Response Condition / Normal Operations)* - System activity is normal with response coordinated with local on-call personnel. Incident Command Structure not activated.
(0 - 840 customers)

Type 4 **Moderate Impact Event** *(Heightened Alert)* - The severity within a Region(s) is (are) such that restoration activities are generally accomplished within a 24 hour period. This may require assistance from another Region or contractors. Incident Command Structure may be activated at the Region level.
(840 - 2100 customers)

Type 3 **Serious Impact Event** *(Enhanced Support)* - The severity within a Region(s) is (are) such that restoration activities are generally accomplished with assistance from other Regions and contractors within 24 to 48 hour period. Incident Command structure activated at the Regional level.
(2100 - 4200 customers)

Type 2 **Major Impact Event** *(Comprehensive Support)* – The severity within the Region (s) is (are) such that restoration activities are generally accomplished with assistance from other Regions and contractors within a 48 to 144 hour period. This may require mutual assistance from other utilities. Incident Command Structure activated at the Regional level and may be activated at the System level.
(4200 - 8400 customers)

Type 1 **Catastrophic Impact Event** *(Emergency Support)* – The severity within a Region(s) is (are) such that restoration activities are accomplished with assistance from other Regions, contactors and require mutual assistance from other utilities. Restoration activities will generally require 48 to 240 hour period. The Incident Command Structure will be activated at the Regional and System levels.
(>8400 customers)

Puc 306.09 (g): Each ERP shall incorporate projected event levels consistent with Table 306-1.

Table 306-1

Utility	ERP Event Level	% Customers Out	Outage Duration (Hrs.)
	5	≤2	<12
	4	>2≤5	0-24
	3	>5 ≤10	24-48
	2	>10≤20	48-144
	1	>20	48-240

Electric Operations Emergency Response Assignments

Assignments in Red are Primary
S Secondary
B Backup

Prepared By: Leo Cody

As of: March 5 2018

Emergency Position	Name	Available Training	Comments
President	Susan Fleck		
Vice-President Operations & Engineering	Craig Jennings		
1. System Incident Commander	**Anthony Strabone**	ICS Checklist	
	Mark Parker		
2. Regional Commander	**Ryan Tsantoulis - Salem**	ICS Checklist	
	Travis Singer - Lebanon		
3. Resource Officer	**Heather Tebbetts**	ICS Checklist	NHWebEOC Access
	Steve Mullen - S		
4. Logistics Officer	**Rich Foley**	ICS Checklist	
	Phyllis Chopelas - S		
	Dana Rogers - B		
	Brenda Pelletier - B		
	Karen Sinville - B		
5. Finance Officer	**Tisha Sanderson**	ICS Checklist	
	Cynthia Trottier - S		
6. Human Resources Officer	**Lori Oliveira**	ICS Checklist	
	John Sanabria - S		
7. Liaison Officer	**Michael Licata**	ICS Checklist	NHWebEOC Access
	Huck Montgomery - S		
8. Information Officer	**John Shore**	ICS Checklist	
	Dina Sylvester - S		
9. System Control Center	**Norm Gallagher**		
	Kathy Kelley - S		
	Emily Backels - B		
10. Customer Call Center	**Christine Downing**		
(Customer Service)	Nicole Harris - S		
	Kristen Lange - B		
	Mercedes Grenier - B		
	Laura Sasso - B		
	Joanne Iovino - B		
11. Data Collection Officer	**Leo Cody**		NHWebEOC Access

Electric Operations Emergency Response Assignments

Assignments in Red are Primary
S Secondary
B Backup

Prepared By: Leo Cody

As of: March 5 2018

Emergency Position	Name	Available Training	Comments
12. Gas Operations	**Rich MacDonald**		
	Robert Mostone - S		
13. IT Coordinator	**Don Romano**		
	David Chung - S		
14. Safety / Health Officer	**Kevin Spottiswood**	ICS Checklist	
	Rich Paradie - S		
15. Environmental Officer	**Mary Casey**	ICS Checklist	
	Rich Paradie - S		
16. Security / Facilities Officer	**Doug Dorn**	ICS Checklist	
	Shawn Raleigh - S		
17. Electric Operations Supervisor	**Ryan Tsantoulis - Salem**		
	Travis Singer - Lebanon		
	Mario Barone - S		
	Ken Salter - B		
18. Municipal Room Coordinator	**Jill Fitzpatrick**		NHWebEOC Access
	Lisa DeGregory - S		
	Tracy Musto - B		
	Jessica Kelly - B		
	Nichole Kallini - B		
	Dennis Gray - B		
	Rob Reals - B		
	Alice Renault - B		
	Eric Stanley - B		
Service Inspector Coordinator	**Melissa Samenfeld**		
(Located in Municipal Room)	**Jessica Louden**		
	Christopher Bouchard		
19. Wires Down - Office Support	**Jennifer Figueroa**	Responder	
	Tedd Cluff		
	Stacy Christopher - S		
	Judith Coulombe - B		
	Jesse Wooster - B		
	Mark Summerfield - B		
	Sarah Finnegan - B		

Electric Operations Emergency Response Assignments

Assignments in Red are Primary
S Secondary
B Backup

Prepared By: Leo Cody — As of: March 5 2018

Emergency Position	Name	Available Training	Comments
Wires Down - Wire Guarding	**Bob Mostone**	Training Dept.	
	Alain Tinker - S		
	Gas Operations Personnel		
20. Wires Down Field Assessor Coordinator	**Kevin Hollins**		
	Chuck Jones		
	Deb Reilly - B		
	Dave Saffie - B		
	Marylou Avery - B		
	Amy Lyons - B		
	Mike Moody - B		
	Josh Ortiz - B		
	Steve Carney - B		
	AJ Furtado - B		
21. Damage Assessment	**David Lepie**		
	Chuck Rodrigues - S		
	Andrew Mills - B		
	Brad Marx - B		
	Ryan Burns - B		
	Dave Saal - B		
	Peter Chivers - B		
	Thomas Todd - B		
	Brian Frost - B		
	Matthew Minghella - B		
Drivers:	Jim Riordan		
	Steve Hall		
	Marty DeBruin		
	Ryan Lagasse		
22. Tree Crew / Forestry Coordinator	**Jeff Carney**		
(Vegetation Management)	Leonard Jenkins-Consultant		
	Heather Green-Consultant		
	Ed Wollschlager-Consultant		
23. OnBoarding Contractors	**Rich Paradie**	Handout	
	Ken Salter - S		
	Mario Barone - B		
	Kevin Spottiswood - B		
	Jeff Carney - B		
24. Field Guide Mutual Aid Contractors	**Bob Johnson**		
	Ken Salter - S		

Electric Operations Emergency Response Assignments	**Assignments in Red are Primary** **S Secondary** **B Backup**		
Prepared By: Leo Cody		As of: March 5 2018	
Emergency Position	**Name**	**Available Training**	**Comments**
	Retirees		
25. Service Restoration / Outage Coordinator (Storm Room)	**Joel Rivera**	Responder	
	Anthony Strabone - S		
	Mel Emerson - B		
	Rick Huntley - B		
26. Substations	**Mario Barone**		

Notes:

1. *ICS Checklist:* Incident Command System Checklist is available on the CQ&EM site.

2. *Training Dept.:* Slides prepared by the Training Dept. are available on the CQ&EM site. They include:
   - "Electrical Hazard Awareness"
   - "Orientation for Wires Down"
   - "Orientation for Damage Assessment Personnel"
   - "Field Guide for Mutual Aid Crews"
   - "Storm Assignment Preparation"
   - "Electric Operations Fundamentals"
   - "Gas Operations Fundamentals"

3. *Responder:* See the "Job Aid for Responder" on the CQ&EM site.

4. *NHWebEOC Access:* Indicates that the individual has completed NH WebEOC training.

5. *Primary:* *May also indicate Day Shift.*

6. *Secondary / Backup:* *May also indicate Night Shift.*

ELECTRIC EVENT ORGANIZATION

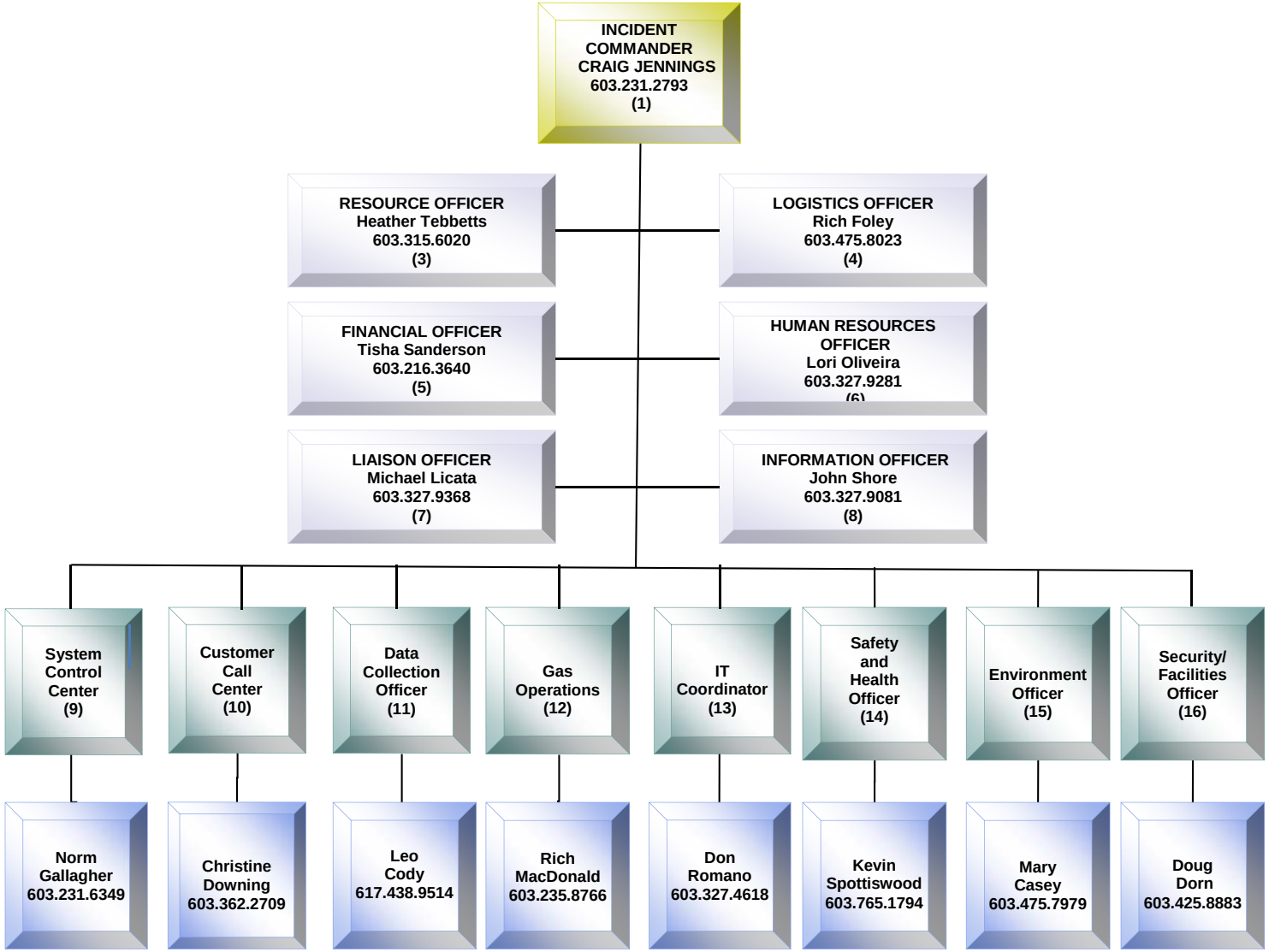

Prepared By: Leo Cody

As of: March 5, 2018

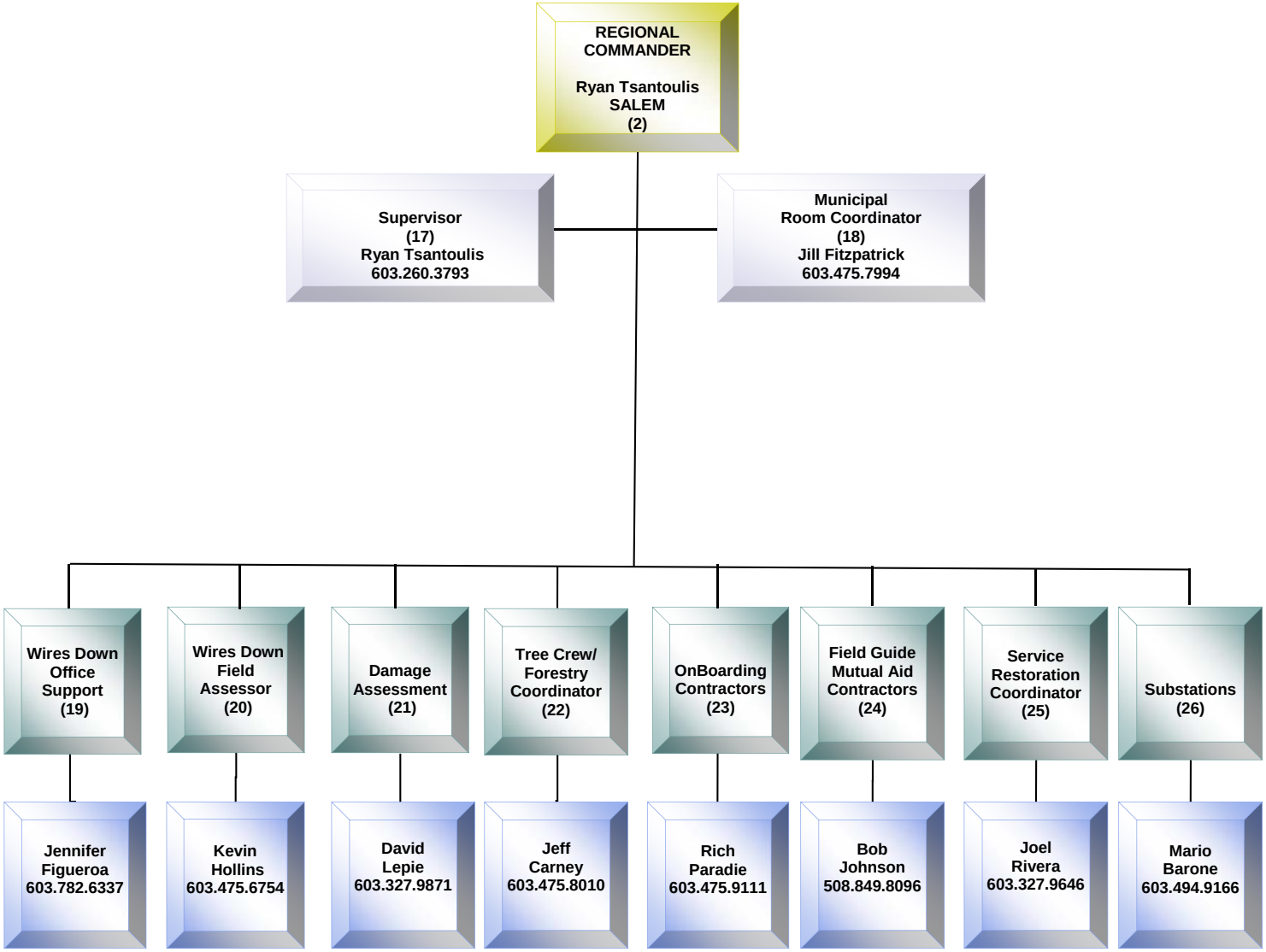
REGIONAL COMMANDER
Ryan Tsantoulis
SALEM
(2)
Supervisor
(17)
Ryan Tsantoulis
603.260.3793
Municipal
Room Coordinator
(18)
Jill Fitzpatrick
603.475.7994
Wires Down Office Support (19)
Wires Down Field Assessor (20)
Damage Assessment (21)
Tree Crew/ Forestry Coordinator (22)
OnBoarding Contractors (23)
Field Guide Mutual Aid Contractors (24)
Service Restoration Coordinator (25)
Substations (26)
Jennifer Figueroa
603.782.6337
Kevin Hollins
603.475.6754
David Lepie
603.327.9871
Jeff Carney
603.475.8010
Rich Paradie
603.475.9111
Bob Johnson
508.849.8096
Joel Rivera
603.327.9646
Mario Barone
603.494.9166

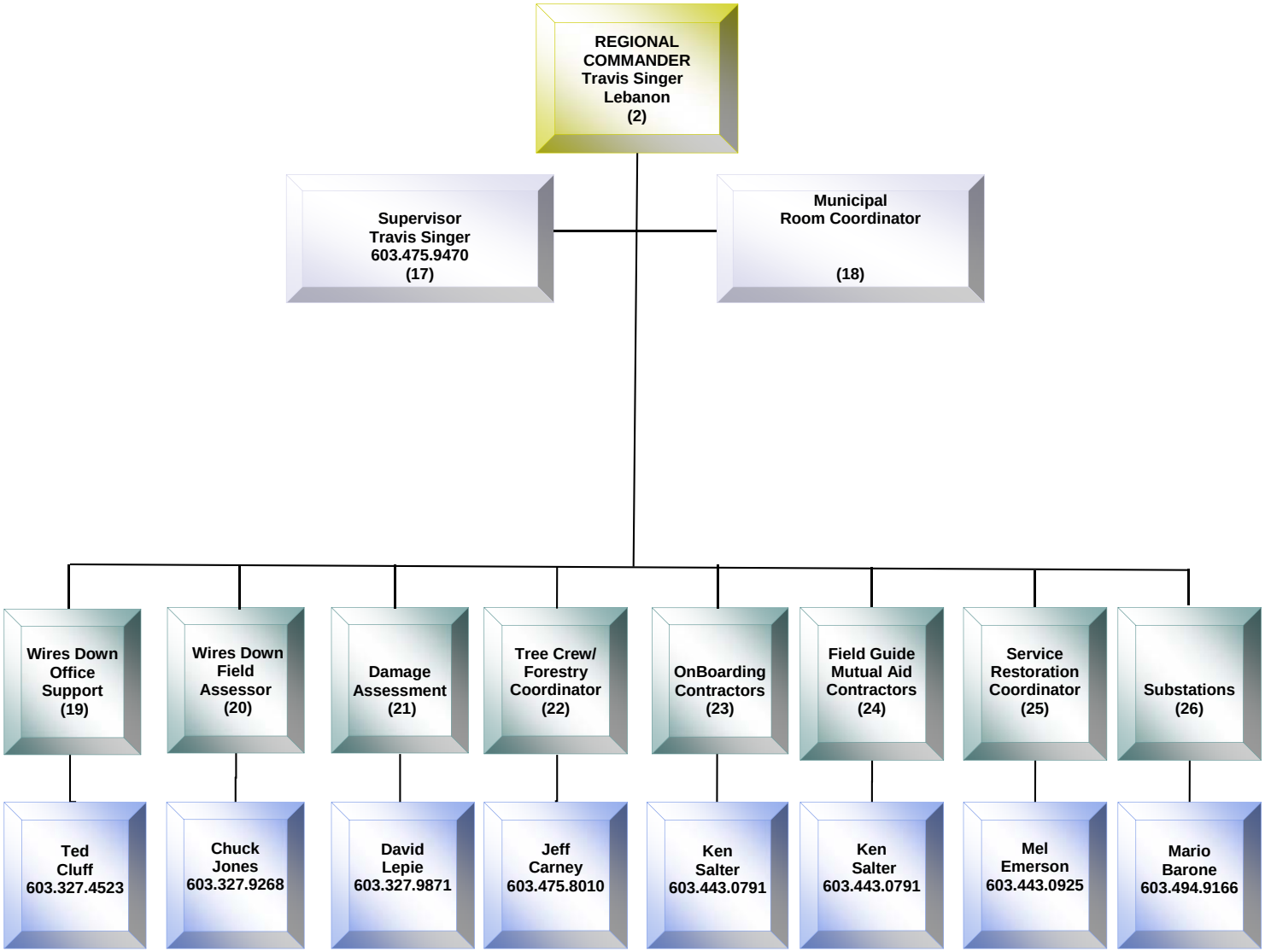
REGIONAL COMMANDER Travis Singer Lebanon (2)
Supervisor Travis Singer 603.475.9470 (17)
Municipal Room Coordinator (18)
Wires Down Office Support (19)
Wires Down Field Assessor (20)
Damage Assessment (21)
Tree Crew/ Forestry Coordinator (22)
OnBoarding Contractors (23)
Field Guide Mutual Aid Contractors (24)
Service Restoration Coordinator (25)
Substations (26)
Ted Cluff 603.327.4523
Chuck Jones 603.327.9268
David Lepie 603.327.9871
Jeff Carney 603.475.8010
Ken Salter 603.443.0791
Ken Salter 603.443.0791
Mel Emerson 603.443.0925
Mario Barone 603.494.9166

Liberty Utilities

Meeting Agenda – During Event

Event Name: **Meeting Number:**
Meeting Date: **Meeting Time:**
Meeting Host: Form Revised on March 6, 2018

President	Susan Fleck			
Vice-President	Craig Jennings			
Assignments – Incident Command System	**Primary**	**Attend**	**Secondary**	**Attend**
1. Incident Commander	Anthony Strabone		Mark Parker	
2a.Regional Commander-Salem	Ryan Tsantoulis			
2b.Regional Commander-Lebanon	Travis Singer			
3. Resource Officer	Heather Tebbetts		Steve Hall	
4. Logistics Officer	Rich Foley		Phyllis Chopelas	
5. Financial Officer	Tisha Sanderson		Cynthia Trottier	
6. Human Resource Officer	Lori Oliveira		John Sanabria	
7. Liaison Officer	Michael Licata		Huck Montgomery	
8. Information Officer	John Shore			
9. System Control Center	Norm Gallagher		Kathy Kelley	
10 Customer Call Center	Christine Downing		Nicole Harris	
11.Data Collection Officer	Leo Cody			
12.Gas Operations	Rich MacDonald		Bob Mostone	
13.IT Coordinator	Don Romano		David Chung	
14.Safety & Health Officer	Kevin Spottiswood		Rich Paradie	
15.Environment Officer	Mary Casey		Rich Paradie	
16.Security/Facilities Officer	Doug Dorn		Shawn Raleigh	
Assignments - System Wide				
18.Municipal Room Coordinator	Jill Fitzpatrick		Lisa DeGregory	
19.Wires Down Office Support	Jennifer Figueroa		Tedd Cluff	
20.Wires Down Field Assessor	Kevin Hollins		Chuck Jones	
21.Damage Assessment	David Lepie		Chuck Rodrigues	
22.Tree Crew/Forestry Coordinator	Jeff Carney			
23.OnBoarding Contractors	Rich Paradie		Ken Salter	
24.Field Guide Mutual Aid Contractors	Bob Johnson		Ken Salter	
25.Service Restoration Coordinator	Joel Rivera			
26.Substations	Mario Barone			
Assignments - Salem				
17.Electric Operations Supervisor	Ryan Tsantoulis			
On-Call Supervisor				
Assignments - Lebanon				
17.Electric Operations Supervisor	Travis Singer			
On-Call Supervisor				
Assignments - Miscellaneous				
Customer Service	Mercedes Grenier		Kristen Lange	
Electric Control	Emily Backels			
Emergency Management	Mark Eagan			
Engineering	Chuck Rodrigues		Bob Johnson	
Procurement	Dana Rogers			
Training	Ken Salter			
Communications	Emily Paquette			

SAFETY QUESTIONS

1. Is the Public Safe?

2. Are the Employees Safe and All Accounted For?

3. Are the Employees' Family Members Safe?

WEATHER

A. <u>Current Weather Report</u>

A. Source:
B. Time:
C. Description:

B. <u>Current Weather Scenarios</u>

A. Best Case:
B. Worse Case:
C. Most Likely Case:

C. <u>Energy Event Index Forecast</u>

A. Event Level:
B. Confidence Level:

Energy Event Index Definition

No Leaves (Nov 1 - Mar 31)

EEI	Wind Speed	Wind/Gust	Snow	Ice
1	< 40 mph	< 45 mph	< 6 in.	< 1/10 in.
2	>= 40 mph	>= 45 mph	>= 6 in.	>= 1/10 in.
3	>= 50 mph	>= 55 mph	>= 8 in.	>= 3/8 in.
4	>= 60 mph	>= 70 mph	>= 12 in.	>= 1/2 in.
5	>= 70 mph	>= 85 mph	>= 24 in.	>= 1 in.

Confidence Level	
Low	<30% chance the most likely EEI level remains at that level through the event
Medium	30-60% chance the most likely EEI level remains at that level through the event
High	>=60% chance the most likely EEI level remains at that level through the event

*Note: Confidence is NOT a measure of probability of an event occurring; That information can be found in the text product. Confidence is a measure of how likely the forecast EEI level will stay at that level from now through the event, or a way to measure the potential for variability in the forecast. So for example, if it is Monday and there are EEI-2 gusts forecast on Wednesday with high confidence it means the following: There is a >=60% chance the most likely forecasted gusts will remain EEI-2 with all updates from now through Wednesday.

Action Items:

SITUATION ASSESMENT

1. **Has the Incident Commander mobilized the Company resources?**
   Yes ☐ No ☐
   A. Date:
   B. Time:

2. **Event Impact As Of Meeting Time**
   A. Impact Location
   B. Impact Description:

3. **Event Type As Of Meeting Time**
   A. Best Case: Choose an item.
      Customers Impacted -
   B. Worse Case: Choose an item.
      Customers Impacted -
   C. Most Likely Case: Choose an item.
      Customers Impacted –

4. **Has the Governor declared a State of Emergency?**

5. **Has the State opened its Emergency Operations Center?**

6. **Has the NHPUC Safety Division declared a Wide-Scale Emergency?**

7. **Are there any known road closures on the NH WebEOC?**

8. **Damage Assessment Summary As Of Meeting Time**

	Lebanon	Salem	Charlestown
Time of First Outage			
Peak Number of Customers Affected			
Peak Percent of Customers Affected			
Number of Circuits Locked Out			
Number of Feeders Affected			
Number of Substations Affected			
Number of Services To Be Replaced			
Footage of Wire To Be Reattached/Replaced			

RESOURCE DEPLOYMENT

Notes: A crew generally consists of two people (2 FTEs) with a truck and equipment.
Line Crews: Responsible for switching and repair of equipment and hardware and the final energizing of the line.
Digger Crews: Responsible for replacing utility poles.
Tree Crews: Responsible for removing and relocation of downed trees and limbs to eliminate safety hazards.
On Property Crews: Outside contractor crews currently working in state for Liberty Utilities at the time of the event.
Foreign Crews / Mutual Aid Crews: Outside company or contractor crews requested by LU through NAMAG.

1. Company Resources Required to Restore Electric Service As Of Meeting Time
(Liberty Utilities Blue Sky staffing level is 13 crews.)

	Lebanon	Salem	Charlestown	Londonderry	Total
LU Line Crews					
On Property Line Crews					
Additional Contractor Line Crews					
LU Tree Crews					
Troubleshooters					
On Property Tree Crews					
Additional Contractor Tree Crews					
On Property Digger Crews					
Additional Contractor Digger Crews					
Additional Electric Controllers					
Additional Electric Dispatchers					
Additional Customer Service Representatives					

Has the Company canceled vacation for employees?
Has the Company notified employees to be on standby?

2. Foreign / Mutual Aid Resources In State to Restore Electric Service As Of Meeting Time

	Lebanon	Salem	Charlestown	Total
Foreign Line Crews				
Foreign Tree Crews				
Foreign Digger Crews				

3. Additional Foreign / Mutual Aid Resources Needed to Restore Electric Service As Of Meeting Time

	Lebanon	Salem	Charlestown	Total
Foreign Line Crews				
Foreign Tree Crews				
Foreign Digger Crews				

4. North Atlantic Mutual Assistance Group (NAMAG)
Has Liberty Utilities initiated a Joint Mobilization Conference Call through NAMAG? _____
Has another operator initiated a Joint Mobilization Conference Call through NAMAG? _____
What is the Liberty Utilities status at the time of the meeting?
Holding _____ Who made the decision? _____
Requesting _____
Offering _____

Has Liberty Utilities requested assistance from neighboring utilities? _____
(See NAMAG exception to Rules of Engagement if a single impact for a short duration.)

5. Damage Assessment Resources Needed to Restore Electric Service As Of Meeting Time

	Lebanon	Salem	Charlestown	Total
Wires Down Office Support				
Wires Down Field Assessor				
Wires Down Standby				
Damage Assessment				

6. Is there a need to utilize local fire and police for Damage Assessment?

7. Outside Contractors Performing Other Services As Of Meeting Time

Service: Snowplow
Contractor:
Contacted By:

Service: Food
Contractor:
Contacted By:

Action Items:

ESTIMATED TIME OF 90% RESTORATION (See Appendix I of the Emergency Plan)

	Lebanon	Salem	Charlestown
1. Live Wires / Extreme Hazards			
2. Transmission			
3. Substations			
4. Critical Facilities			
5. Life Support Customers			
6. Primary Circuits			
7. Secondary Circuits			
8. Final Circuit Sweep			
9. Permanent Repairs			

Action Items:

STAGING of CREWS, PERSONNEL and MATERIALS

Are all Foreign Crews in place?

Are additional Foreign Crews expected?

When?

	LU Contact	Lebanon	Salem	Charlestown
Crews				
Location				
Onboarding				
Field Guides				
Stand-By Personnel				
Tools, Equipment, Materials				

Security				
Meals				
Lodging				
Municipal Room				
Regional EOC				
Damage Assessment				

Action Items:

COMMUNICATIONS – Updates

A. To Company Employees:

B. To Governor / State Government / NH WebEOC:

C. To NHPUC Safety Division:

D. To Cities / Towns Storm Conference Call:

E. To Customers / Critical Care Customers:

F. To Public:

G. To NAMAG & Other Industry Groups:

H. To Other Pole Attachees:

REPORTS – Action Items

A. Prepare internal Storm Planning Report.
B. Prepare internal Customer Outage Reports.
C. File Puc Forms E-33 and E-36A if a wide scale emergency.
D. Continue to prepare and file all other required reports.

ADMINISTRATION

A. Send all storm related information and documentation to “SM NH Storm Duty”.
B. See CQ&EM folder on Liberty Utilities East site for Emergency Management Forms and Reports.
C. Is this a Qualifying Storm Event?
D. Storm/Event Accounting:

Description	GP Expense Job	GP Capital Job	GP VM Job
Storm Event EII Level			

Storm Contingency Fund (CFID 1748)

The Settlement in Docket No. DG 06-107, Exhibit GSE-7, approved by Order No. 24,777, calls for Granite State to establish a storm contingency fund. The fund would be used to pay for all of the operations and maintenance costs incurred by Granite State as the result of major storms. A major storm is defined as a severe weather event or events causing 30 concurrent troubles (i.e., interruption events occurring on either primary or secondary lines) and 15 percent of customers interrupted or 45 concurrent troubles.

The Settlement in Docket No. DE 13-063, approved in Order No. 25,738, entitles Liberty Utilities to recover certain costs if the weather forecast shows an EII Level of 3 or greater with a high probability of occurrence. The costs include pre-staging of crews, standby arrangements with external contractors, incremental compensation of employees, and other costs that may be incurred to prepare for a qualifying major storm.

INCIDENT COMMAND SYSTEM POSITIONS – Comments / Questions

1. Incident Commander:

2. On-Scene Commander / Regional Commander:

3. Resource Officer:

4. Logistics Officer:

5. Financial Officer:

6. Human Resources Officer:

7. Liaison Officer:

8. Information Officer:

9. System Control Center:

10. Customer Call Center:

11. Data Collection Officer:

12. Gas Operations:

13. IT Coordinator:

14. Safety & Health Officer:

15. Environment Officer:

16. Security/Facilities Officer:

Others:

NEXT MEETING

A. Date:
B. Time:
C. Location:
D. Liberty Storm Conference Call Number: **1-888-875-1833**
   Guest Passcode: **430980**
   Host Passcode: **4309805**

THIS PAGE INTENTIONALLY LEFT BLANK

Appendix *F*

All Events

	ID	Feeder	Date	Duration	CI	CMI	Town	Comments	Cause	Wind	Weather
1	42001	13L2	3/7/2018	63	1	63	SALEM	REATTACHED SERVICE P5 SHADOW LAKE RD DUE TO BROKEN TREE LIMB	Tree - Broken Limb	2-Wind-Strong (32-54 mph)	7-Snow-wet
2	42005	14L1	3/7/2018	96	1	96	PELHAM	SERVICE FROM P7 NANCY RIPPED DOWN BY LARGE TREE - REHUNG	Tree Fell	2-Wind-Strong (32-54 mph)	7-Snow-wet
3	42026	13L2	3/7/2018	73	291	44,827	SALEM	PTR 701213 PHASE C LOCKED OUT @ P5 ZION HILL RD, SALEM. CAUSE: TREE BRANCH PAST P44 ZION HILL RD. BRANCH REMOVED.	Tree - Broken Limb	2-Wind-Strong (32-54 mph)	7-Snow-wet
4	42034	13L2	3/7/2018	3790	18	68,220	SALEM	BLOWN 40K FUSE P1 MATTHEWS DR DUE TO FALLEN TREE MATTHEWS DR, SALEM.	Tree Fell	2-Wind-Strong (32-54 mph)	7-Snow-wet
5	42037	14L3	3/7/2018	82	89	7,298	PELHAM	BLOWN 65K FUSE P51 WINDHAM RD, PELHAM DUE TO BRANCH BETWEEN P53 & P56 WINDHAM RD, PELHAM	Tree - Broken Limb	2-Wind-Strong (32-54 mph)	7-Snow-wet
6	42071	18L4	3/7/2018	94	365	837,983	SALEM	PTR 701187 P47 PELHAM RD, SALEM LOCKED OUT. CLEARED LIMBS ON COMMERCIAL DRIVE, MULTIPLE LOCATIONS.	Tree - Broken Limb	2-Wind-Strong (32-54 mph)	7-Snow-wet
7	42137	13L3	3/8/2018	130	461	59,930	SALEM	PTR 701230 LOCKED OUT [PHASE B & C], P6 SCHOOL ST, SALEM. CAUSE: LIMB P25 SCHOOL ST, SALEM.	Tree - Broken Limb	2-Wind-Strong (32-54 mph)	7-Snow-wet
8	42151	18L2	3/8/2018	61	2018	1,542,855	SALEM	PTR 701015 RECLOSER LOCKED OUT @ P10 VETS MEMORIAL PKWY, SALEM, MULTIPLE TREE LIMBS AT VARIOUS LOCATIONS	Tree - Broken Limb	2-Wind-Strong (32-54 mph)	7-Snow-wet
9	42168	14L4	3/8/2018	1686	1034	1,297,722	PELHAM	14L4 BREAKER LOCKED OUT. CAUSE: LIMBS ON WIRES MULTIPLE LOCATIONS BRIDGE ST, PELHAM	Tree - Broken Limb	2-Wind-Strong (32-54 mph)	7-Snow-wet
10	42214	14L1	3/7/2018	4805	1	4,805	PELHAM	TREE P3 GLADYS ST, PELHAM. REHUNG SERVICE	Tree Fell	2-Wind-Strong (32-54 mph)	7-Snow-wet
11	42336	14L3	3/7/2018	2705	50	135,250	PELHAM	BLOWN 65K LINE FUSE P4 HOBBS - TREE AND WIRES DOWN NEAR P14 SIMPSON MILL RD	Tree Fell	2-Wind-Strong (32-54 mph)	7-Snow-wet
12	42338	14L2	3/7/2018	5158	37	190,846	PELHAM	BLOWN 25K LINE FUSE P28 SHERBURNE RD, PELHAM - DUE TO FALLEN TREE, MULTIPLE LIMBS SHERBURNE RD.	Tree Fell	2-Wind-Strong (32-54 mph)	7-Snow-wet
13	42410	10L4	3/8/2018	3618	1	3,618	SALEM	SERVICE P7 PATTEE RD DAMAGED DUE TO TREE P7 PATTEE RD.	Tree - Broken Limb	2-Wind-Strong (32-54 mph)	7-Snow-wet
14	42429	9L3	3/7/2018	589	103	60,667	SALEM	PTR 701076 P1.5 BROOKDALE RD, SALEM LOCKED OUT. DUE TO LIMBS & DEBRIS ON BROOKDALE RD, SALEM	Tree Fell	2-Wind-Strong (32-54 mph)	7-Snow-wet
15	42443	10L4	3/8/2018	587	244	143,228	SALEM	P4 BUTLER ST PTR 701078 LOCKED OUT DUE TO LARGE LIMB P26 BUTLER	Tree - Broken Limb	2-Wind-Strong (32-54 mph)	7-Snow-wet
16	42585	18L3	3/8/2018	487	698	339,926	SALEM	18L3 BREAKER LOCKED OPEN.- CAUSE: MULTIPLE FALLEN LIMBS ALONG THE SOUTH POLICY AND PLEASANT ST.	Tree - Broken Limb	2-Wind-Strong (32-54 mph)	7-Snow-wet
17	43223	14L2	3/7/2018	2941	23	67,643	PELHAM	BLOWN 40K FUSE P23 MAIN ST, PELHAM DUE TO STORM, MULTIPLE LIMBS ON WIRE MAIN ST & HEATHER LEE LANE. REMOVED.	Tree - Broken Limb	2-Wind-Strong (32-54 mph)	7-Snow-wet
18	42678	10L4	3/8/2018	3917	2	7,834	SALEM	DISCONNECTED SECONDARY WIRES AT P11 PATTEE RD DUE TO BROKEN POLE 12 PATTEE RD FROM A FALLEN TREE.	Tree Fell	2-Wind-Strong (32-54 mph)	7-Snow-wet
19	42687	14L3	3/8/2018	2280	321	392,238	PELHAM	MANUALLY OPENED P42 WINDHAM RD * FAILED DEADEND BELLS AND DISC. @ P41 REPAIRED PHASE OFF GLASS @ 39	Device Failed	2-Wind-Strong (32-54 mph)	7-Snow-wet
20	43001	12L1	3/8/2018	484	2	968	WALPOLE	BLOWN 25K LINE FUSE P81 VALLEY ROAD / PRIMARY IN CONTACT WITH NEUTRAL P1 EATON RD DUE TO SNOW	Unknown	2-Wind-Strong (32-54 mph)	7-Snow-wet
21	43129	13L3	3/8/2018	1636	2	3,272	SALEM	BLOWN FUSES P14 GEREMONTY DR. - LIMB P15 GEREMONTY	Tree - Broken Limb	2-Wind-Strong (32-54 mph)	7-Snow-wet
22	43189	18L3	3/8/2018	2062	6	12,372	SALEM	BLOWN FUSES P26 SOUTH POLICY. CAUSE UNKNOWN	Unknown	2-Wind-Strong (32-54 mph)	7-Snow-wet
23	45498	9L1	3/9/2018	2683	1	2,683	SALEM	SERVICE FROM P4 CHURCH AVE RECONNECTED	Tree - Broken Limb	2-Wind-Strong (32-54 mph)	7-Snow-wet
24	43754	14L2	3/7/2018	921	822	757,062	PELHAM	PTR# 704012 P5 BURNS RD, PELHAM LOCKED OUT - MULTIPLE TREES/BRANCHES FELL INTO PRMIARY	Tree - Broken Limb	2-Wind-Strong (32-54 mph)	7-Snow-wet

	ID	Feeder	Date	Duration	CI	CMI	Town	Comments	Cause	Wind	Weather
25	43241	9L3	3/7/2018	760	138	382,878	WINDHAM	BLOWN 65K FUSES SEARLES RD WINDHAM DUE TO TREES.	Tree Fell	2-Wind-Strong (32-54 mph)	7-Snow-wet
26	43275	9L1	3/8/2018	206	101	20,806	SALEM	MANUALLY OPENED 50K LINE FUSES P15 MAIN ST - EMERGENCY - LARGE TREE FELL, WIRES DOWN,	Tree Fell	2-Wind-Strong (32-54 mph)	7-Snow-wet
27	43416	10L2	3/8/2018	324	457	196,317	SALEM	PTR# 701013 P9 CLUFF RD, SALEM LOCKED OUT (2X OPS) DUE TO MULTIPLE TREES ALONG CLUFF	Tree - Broken Limb	2-Wind-Strong (32-54 mph)	7-Snow-wet
28	43479	10L2	3/8/2018	735	41	30,135	SALEM	BLOWN 40K FUSE AT P24 KELLY RD BETWEEN P 7-8 CHATHAM CIRCLE DOWNED PRIMARY AND SECONDARY	Tree Fell	2-Wind-Strong (32-54 mph)	7-Snow-wet
29	43702	10L4	3/8/2018	2725	37	100,825	SALEM	BLOWN 25K FUSE AT P19 WHEELER - TREE FELL AND CLEARED AT P2 ASHWOOD PRIMARIES AND SECONDARIES DOWN BETWEEN P's 1-4	Tree Fell	2-Wind-Strong (32-54 mph)	7-Snow-wet
30	43720	10L2	3/8/2018	2783	25	69,575	SALEM	BLOWN 25K FUSE AT P2 COLE ST SALEM DUE TO FALLEN TREE AT AT P3 GARRISON. DOWNED SERVICE WIRE.	Tree Fell	2-Wind-Strong (32-54 mph)	7-Snow-wet
31	45259	10L2	3/9/2018	603	63	37,989	SALEM	BLOWN 40K FUSE (1 OF 3) CENTER PHASE AT P7 BARRON AVE . TREE LIMBS ON LINE BETWEEN POLES 2 & 3 HAIGH ST.	Tree - Broken Limb	2-Wind-Strong (32-54 mph)	7-Snow-wet
32	43746	10L4	3/8/2018	3102	1	3,102	SALEM	REHUNG SERVICE FROM P25-1 WHEELER AVE	Tree Fell	2-Wind-Strong (32-54 mph)	7-Snow-wet
33	42624	14L2	3/8/2018	1633	81	132,273	PELHAM	LINE FUSE OPEN P16 BUSH HILL, PELHAM - CAUSE: TREE DOWN @ #123 BUSH HILL & LIMBS DOWN OTHER LOCATIONS	Tree Fell	2-Wind-Strong (32-54 mph)	7-Snow-wet
34	42901	14L2	3/8/2018	536	1977	4,071,587	PELHAM	14L2 BREAKER LOCKED OUT DUE TO MULTIPLE FALLEN TREES	Tree Fell	2-Wind-Strong (32-54 mph)	7-Snow-wet
35	46939	14L2	3/8/2018	3216	904	2,907,264	PELHAM	PTR# 704008 P5 NASHUA RD, PELHAM LOCKED OUT - MULTIPLE TREES/BRANCHES FELL INTO PRMIARY	Tree Fell	2-Wind-Strong (32-54 mph)	7-Snow-wet
36	47066	14L2	3/8/2018	3868	305	1,179,740	PELHAM	PTR# 704020 P127 MAMMOTH RD, PELHAM LOCKED OUT - MULTIPLE TREES/BRANCHES FELL INTO PRMIARY	Tree Fell	2-Wind-Strong (32-54 mph)	7-Snow-wet
37	46727	14L2	3/10/2018	1002	37	37,074	PELHAM	MANUALLY OPENED 15K LINE FUSE P84 MAMMOTH RD FOR REPAIRS	Tree - Broken Limb	2-Wind-Strong (32-54 mph)	7-Snow-wet
38	46728	14L2	3/10/2018	219	119	26,061	PELHAM	MANUALLY OPENED 65K FUSE P115 MAMMOTH RD TO MAKE REPAIRS ON JEREMY HILL RD	Tree - Broken Limb	2-Wind-Strong (32-54 mph)	7-Snow-wet
39	46729	14L2	3/10/2018	219	50	10,950	PELHAM	MANUALLY OPENED 40K FUSE P1 MADISON AVE TO MAKE REPAIRS ON JEFFERSON AVE	Tree - Broken Limb	2-Wind-Strong (32-54 mph)	7-Snow-wet
40	46730	14L2	3/10/2018	219	14	3,066	PELHAM	MANUALLY OPENED 15K FUSE P11 BROOKVIEW DR TO MAKE REPAIRS ON HOMESTEAD RD	Tree - Broken Limb	2-Wind-Strong (32-54 mph)	7-Snow-wet
41	46731	14L2	3/10/2018	219	29	6,351	PELHAM	MANUALLY OPENED 25K FUSE P20 NASHUA RD TO MAKE REPAIRS ON COLONIAL DR AND INDEPENDENCE DR	Tree - Broken Limb	2-Wind-Strong (32-54 mph)	7-Snow-wet
42	46814	14L2	3/11/2018	347	1	347	PELHAM	TREE LIMB ON SERVICE P15 BROOKVIEW DR, PELHAM. REPLACED SERVICE	Tree - Broken Limb	2-Wind-Strong (32-54 mph)	7-Snow-wet
43	46893	14L2	3/12/2018	157	1	157	PELHAM	TREE FELL ON SERVICE- SPLICED SERVICE AND REHUNG- GUMPUS HILL RD, PELHAM NH	Tree Fell	2-Wind-Strong (32-54 mph)	7-Snow-wet
44	43782	9L3	3/8/2018	1814	25	45,350	SALEM	BlOWN FUSE P1 W SHORE RD DUE TO DAMAGED POLE TOP AT WOODVUE RD. TREES IN WIRES.	Tree Fell	2-Wind-Strong (32-54 mph)	7-Snow-wet
45	44772	9L3	3/7/2018	1274	62	78,988	SALEM	BLOWN FUSE P23 N POLICY ST. CAUSE UNKNOWN	Unknown	2-Wind-Strong (32-54 mph)	7-Snow-wet
46	45015	9L3	3/7/2018	1542	42	64,764	SALEM	BLOWN 40K LINE FUSE P1 WEST DUSTON DUE TO FALLEN TREE AT P4 WEST DUSTON RD	Tree Fell	2-Wind-Strong (32-54 mph)	7-Snow-wet
47	45133	13L2	3/8/2018	1325	252	333,900	WINDHAM	BLOWN FUSE P28 ROCKINGHAM RD WINDHAM (ROAD PHASE CLOSED). CAUSE UNKNOWN	Unknown	2-Wind-Strong (32-54 mph)	7-Snow-wet

	ID	Feeder	Date	Duration	CI	CMI	Town	Comments	Cause	Wind	Weather
48	45188	13L2	3/8/2018	848	2	1,696	WINDHAM	BLOWN 15K LINE FUSE P4 SHADOW LAKE RD DUE TO BRANCH ON LINES	Tree - Broken Limb	2-Wind-Strong (32-54 mph)	7-Snow-wet
49	45222	9L3	3/8/2018	2144	42	90,048	WINDHAM	BLOWN FUSE ROULSTON RD AND SEARLES RD FEEDING ROULSTON RD. PRIMARY DOWN BETWEEN P4-5 ROULSTON RD.	Tree Fell	2-Wind-Strong (32-54 mph)	7-Snow-wet
50	45238	9L3	3/8/2018	2400	3	7,200	WINDHAM	BLOWN FUSE P38 ROCKINGHAM RD. MIDDLE PHASE WIRES DOWN AT ROULSTON RD	Tree Fell	2-Wind-Strong (32-54 mph)	7-Snow-wet
51	45277	9L3	3/9/2018	3317	2	6,634	WINDHAM	BLOWN 15K FUSE P16 SEARLES CASTLE RD - BROKEN P15-1 REPLACED AND TRANSFERRED	Tree Fell	2-Wind-Strong (32-54 mph)	7-Snow-wet
52	45299	9L3	3/9/2018	2886	1	2,886	SALEM	CUSTOMER MADE REPAIRS AND SERVICE REHUNG FROM P58 N POLICY	Tree - Broken Limb	2-Wind-Strong (32-54 mph)	7-Snow-wet
53	45324	9L3	3/8/2018	1797	21	37,737	WINDHAM	BLOWN 50K FUSE P3 JOHNSON RD - TREES ON BIRCHWOOD	Tree Fell	2-Wind-Strong (32-54 mph)	7-Snow-wet
54	45383	9L3	3/8/2018	41	516	21,156	WINDHAM	MANUALLY OPENED PTR 701013 P7 RANGE RD FROM POLICE/FIRE REQUEST	Unknown	2-Wind-Strong (32-54 mph)	7-Snow-wet
55	45396	13L2	3/9/2018	10	2	20	WINDHAM	BLOWN 10K FUSE P26 ROCKINGHAM RD - LARGE LIMBS REMOVED FROM TREE ON JONES RD	Tree Fell	2-Wind-Strong (32-54 mph)	7-Snow-wet
56	45402	9L3	3/9/2018	339	1	339	SALEM	REHUNG SERVICE FROM P6 LAKE SHORE RD - TREE LIMB	Tree - Broken Limb	2-Wind-Strong (32-54 mph)	7-Snow-wet
57	45404	9L3	3/9/2018	1953	2	3,906	WINDHAM	BLOWN 15K TRANSFORMER FUSE P5 JOHNSON RD - REHUNG SERVICE FROM P5 JOHNSON RD - TREE LIMBS ON SERVICE	Tree - Broken Limb	2-Wind-Strong (32-54 mph)	7-Snow-wet
58	45465	9L3	3/9/2018	2394	1	2,394	SALEM	REATTACHED SERVICE FROM P9-50 PLEASEANT ST	Tree - Broken Limb	2-Wind-Strong (32-54 mph)	7-Snow-wet
59	45751	13L2	3/9/2018	1680	48	80,640	SALEM	BLOWN 65K FUSE AT P33 LAKE ST - PRIMARY DOWN BETWEEN P19-20 SAMOSET DR	Tree Fell	2-Wind-Strong (32-54 mph)	7-Snow-wet
60	45965	9L3	3/9/2018	1665	20	33,300	WINDHAM	BLOWN 25K FUSE P6 JOHNSON RD - TREES ON ROLLING RIDGE RD	Tree - Broken Limb	2-Wind-Strong (32-54 mph)	7-Snow-wet
61	46692	9L3	3/10/2018	945	1	945	SALEM	REPAIRED SERVICE WIRES AT P9-50 PLEASANT ST.	Tree - Broken Limb	2-Wind-Strong (32-54 mph)	7-Snow-wet
62	46825	9L3	3/10/2018	1610	135	217,350	WINDHAM	BLOWN 65K FUSE (1 OF 3) P26 RANGE RD - CAUSE UNKNOWN	Unknown	2-Wind-Strong (32-54 mph)	7-Snow-wet
63	42080	13L2	3/7/2018	125	291	36,375	SALEM	P5 ZION HILL RD, SALEM PTR 701213 LOCKED OPEN [PHASE B & C]. CAUSE: MULTIPLE LIMBS. CLEARED LIMB @ P44 ZION HILL RD.	Tree - Broken Limb	2-Wind-Strong (32-54 mph)	7-Snow-wet
64	42844	13L2	3/8/2018	3218	30	96,540	SALEM	BLOWN 50K FUSE P16 SHADOW LAKE - TREE AND WIRES DOWN ON DOIRON RD	Tree - Broken Limb	2-Wind-Strong (32-54 mph)	7-Snow-wet
65	45995	13L2	3/9/2018	1421	1	1,421	SALEM	REATTACHED SERVICE TO P3 LAKE ST - TREE LIMB	Tree - Broken Limb	2-Wind-Strong (32-54 mph)	7-Snow-wet
66	45996	13L2	3/9/2018	2276	1	2,276	SALEM	SERVICE FROM P12 LAKE REHUNG - TREE LIMBS	Tree - Broken Limb	2-Wind-Strong (32-54 mph)	7-Snow-wet
67	46785	13L2	3/11/2018	570	1	570	SALEM	TREE BRANCH TORE DOWN SERVICE FROM P18 GROVE AVE - CREW RE INSTALLED TRIPLEX	Tree - Broken Limb	2-Wind-Strong (32-54 mph)	7-Snow-wet
68	46789	13L2	3/11/2018	40	6	240	SALEM	CREW OPENED 15K TRANSFORMER FUSE P11 LAKE ST TO REPAIR SECONDARIES DUE TO TREE CONTACT P11 LAKE ST	Tree - Broken Limb	2-Wind-Strong (32-54 mph)	7-Snow-wet
69	46904	13L2	3/8/2018	2126	1944	3,722,402	SALEM	LOSS OF NATIONAL GRID 2376 LINE DUE TO FALLEN TREE AT 23KV MASSACHUSSETS ROW	Tree Fell	2-Wind-Strong (32-54 mph)	7-Snow-wet
70	45241	13L1	3/8/2018	1894	8	15,152	SALEM	BLOWN FUSE P35 NORTH MAIN ST. PRIMARY DOWN BETWEEN NORTH MAIN AND JENNINGS RD	Tree - Broken Limb	2-Wind-Strong (32-54 mph)	7-Snow-wet
71	45423	13L1	3/8/2018	3502	1	3,502	SALEM	REPLACED SERVICE FROM P4 GLEN RD - TREE FELL P4 GLEN	Tree Fell	2-Wind-Strong (32-54 mph)	7-Snow-wet

	ID	Feeder	Date	Duration	CI	CMI	Town	Comments	Cause	Wind	Weather
72	45426	13L1	3/8/2018	3849	2	7,698	SALEM	SECONDARY AND SERVICE RESTORED FROM P3 ELSIE AVE - TREE P3 ELSIE AVE	Tree - Broken Limb	2-Wind-Strong (32-54 mph)	7-Snow-wet
73	45885	13L1	3/8/2018	2070	2219	5,520,078	SALEM	LOSS OF NATIONAL GRID 2376 LINE DUE TO FALLEN TREE AT 23KV MASSACHUSSETS ROW	Tree Fell	2-Wind-Strong (32-54 mph)	7-Snow-wet
74	45897	13L1	3/9/2018	4204	1	4,204	SALEM	REATTACHED SERVICE AT P7 TO P7-1 ATKINSON RD - TREE LIMB P7-1	Tree - Broken Limb	2-Wind-Strong (32-54 mph)	7-Snow-wet
75	45904	13L1	3/9/2018	825	73	60,225	DERRY	BLOWN 40K LINE FUSE P13 ERMER RD, DERRY - CLEARED & PATROLLED - MANY LIMBS	Tree - Broken Limb	2-Wind-Strong (32-54 mph)	7-Snow-wet
76	45976	13L1	3/9/2018	2315	2	4,630	SALEM	RE-INSTALLED SECONDARY P7 TO P7-80 ATKINSON RD DUE TO FALLEN TREE	Tree Fell	2-Wind-Strong (32-54 mph)	7-Snow-wet
77	45979	13L1	3/10/2018	1440	8	11,520	SALEM	BLOWN 6K LINE FUSE P10 HENRY TAYLOR ST - TREE AND WIRES DOWN ON KING ST	Tree Fell	2-Wind-Strong (32-54 mph)	7-Snow-wet
78	45980	13L1	3/9/2018	577	50	28,850	SALEM	BLOWN 25K FUSE P168 N. MAIN ST SALEM - LIMBS ON PARKER CIR	Tree - Broken Limb	2-Wind-Strong (32-54 mph)	7-Snow-wet
79	45982	13L1	3/9/2018	519	27	14,013	SALEM	BLOWN 40K LINE FUSE P4 CHAPPY LN - TREE LIMBS	Tree - Broken Limb	2-Wind-Strong (32-54 mph)	7-Snow-wet
80	46194	13L1	3/9/2018	753	6	4,518	DERRY	BLOWN 15K TRANSFORMER FUSE P9 LADY LN - TREE LIMBS REMOVED BY TREE CREW	Tree - Broken Limb	2-Wind-Strong (32-54 mph)	7-Snow-wet
81	46651	13L1	3/9/2018	927	73	67,671	SALEM	BLOWN 40K FUSE P13 ERMER RD, SALEM - CAUSE UNKNOWN	Unknown	2-Wind-Strong (32-54 mph)	7-Snow-wet
82	46709	13L1	3/10/2018	1370	1	1,370	SALEM	TWO SECTIONS OF SECONDARY REHUNG FROM P67 SHORE DR - CAUSE: TREE LIMBS P67 SHORE DR, SALEM	Tree - Broken Limb	2-Wind-Strong (32-54 mph)	7-Snow-wet
83	42816	13L3	3/8/2018	855	2588	2,230,874	SALEM	LOSS OF NATIONAL GRID 2376 LINE DUE TO FALLEN TREE AT 23KV MASSACHUSSETS ROW	Tree Fell	2-Wind-Strong (32-54 mph)	7-Snow-wet
84	43129	13L3	3/8/2018	1636	2	3,272	SALEM	BLOWN FUSES P14 GEREMONTY DR. - LIMB P15 GEREMONTY	Tree - Broken Limb	2-Wind-Strong (32-54 mph)	7-Snow-wet
85	45384	13L3	3/8/2018	2001	11	22,011	SALEM	BLOWN 10K TRANSFORMER FUSE P38 BRIDGE ST - CREWS PATROLLED LINE AND CLEARED BRANCHES	Tree - Broken Limb	2-Wind-Strong (32-54 mph)	7-Snow-wet
86	45390	13L3	3/8/2018	2736	155	424,080	SALEM	BLOWN 40K LINE FUSE P10 WHEELER AVE - CREWS MADE REPAIRS IN VARIOUS AREAS ON OLD COACH RD AND PALOMINO RD	Tree Fell	2-Wind-Strong (32-54 mph)	7-Snow-wet
87	45394	13L3	3/8/2018	2065	24	49,560	SALEM	BLOWN 25K FUSE P23 BRIDGE - BRANCHES ON STANWOOD	Tree - Broken Limb	2-Wind-Strong (32-54 mph)	7-Snow-wet
88	45395	13L3	3/8/2018	2302	9	20,718	SALEM	BLOWN 15K TRANSFORMER FUSE P6 SHERWOOD CIR - LIMB P6 SHERWOOD CIR	Tree - Broken Limb	2-Wind-Strong (32-54 mph)	7-Snow-wet
89	45397	13L3	3/8/2018	2302	29	66,758	SALEM	BLOWN 25K FUSE P4 SHERWOOD CIRCLE - CLEARED BRANCHES ON TAMMY ST	Tree - Broken Limb	2-Wind-Strong (32-54 mph)	7-Snow-wet
90	46719	13L3	3/10/2018	847	1	847	SALEM	TREE LIMB ON SERVICE FROM P9-2 WELSH CIR, SALEM TO HOUSE.	Tree - Broken Limb	2-Wind-Strong (32-54 mph)	7-Snow-wet
91	46756	13L3	3/10/2018	1027	1	1,027	SALEM	SERVICE REHUNG FROM P11 HENDERSON CIR	Tree - Broken Limb	2-Wind-Strong (32-54 mph)	7-Snow-wet
92	46790	13L3	3/11/2018	770	1	770	SALEM	SERVICE DOWN DUE TO TREE P18 BRIDGE ST, SALEM	Tree - Broken Limb	2-Wind-Strong (32-54 mph)	7-Snow-wet
93	42669	18L2	3/8/2018	615	2018	1,241,070	SALEM	18L2 CB LOCKED OUT. - TREE CONDITIONS ALL ALONG CROSS ST AND BRADY AVE	Tree Fell	2-Wind-Strong (32-54 mph)	7-Snow-wet
94	44728	18L2	3/8/2018	193	51	9,843	SALEM	BLOWN 25K FUSE AT P6 S. POLICY ST. SALEM TREE BRANCHES REMOVED FROM LINES	Tree - Broken Limb	2-Wind-Strong (32-54 mph)	7-Snow-wet
95	44790	13L3	3/8/2018	3673	1	3,673	SALEM	REPLACED SECONDARY WIRES AT HENDERSON AVE	Tree - Broken Limb	2-Wind-Strong (32-54 mph)	7-Snow-wet

	ID	Feeder	Date	Duration	CI	CMI	Town	Comments	Cause	Wind	Weather
96	45048	13L3	3/8/2018	2330	11	25,630	SALEM	BLOWN 15K TRANSFORMER FUSE P2 TOWNSEND - BRANCH	Tree - Broken Limb	2-Wind-Strong (32-54 mph)	7-Snow-wet
97	45057	13L3	3/8/2018	2803	1	2,803	SALEM	TREE REMOVED AND SERVICE REPAIRED AT THERIAULT AVE	Tree Fell	2-Wind-Strong (32-54 mph)	7-Snow-wet
98	45085	13L3	3/8/2018	1562	13	20,306	SALEM	BLOWN FUSE P9 MEISNER RD DUE TO FALLEN TREE.	Tree Fell	2-Wind-Strong (32-54 mph)	7-Snow-wet
99	45179	13L3	3/9/2018	3126	1	3,126	SALEM	REHUNG SERVICE WIRES AT ROYAL CIR DUE TO BROKEN LIMB	Tree - Broken Limb	2-Wind-Strong (32-54 mph)	7-Snow-wet
100	45243	13L3	3/9/2018	3374	1	3,374	SALEM	SERVICE REHUNG FROM P3 MCLAUGHLIN AVE - LRG TREE FELL	Tree Fell	2-Wind-Strong (32-54 mph)	7-Snow-wet
101	45311	13L3	3/9/2018	3241	1	3,241	SALEM	SERVICE REHUNG FROM P2 PARK AVE - TREE LIMB	Tree - Broken Limb	2-Wind-Strong (32-54 mph)	7-Snow-wet
102	45416	13L3	3/9/2018	1528	1	1,528	SALEM	REHUNG SERVICE P11 GENERAL PULASKI DR - BRANCH	Tree - Broken Limb	2-Wind-Strong (32-54 mph)	7-Snow-wet
103	45482	13L3	3/9/2018	281	58	16,298	SALEM	BLOWN 65K FUSE P26 BRIDGE ST - TREE FELL MATTHIAS ST	Tree Fell	2-Wind-Strong (32-54 mph)	7-Snow-wet
104	45482X	13L3	3/8/2018	1723	758	1,306,034	SALEM	PTR 701225 LOCKED OUT, P4 BRIDGE ST ST, SALEM. CAUSE: MULTIPLE LIMBS ALONG BRIDGE ST AND WHEELER AVE	Tree - Broken Limb	2-Wind-Strong (32-54 mph)	7-Snow-wet
105	45962	13L3	3/9/2018	1392	1	1,392	SALEM	REHUNG SERVICE P11 PALOMINO RD	Tree - Broken Limb	2-Wind-Strong (32-54 mph)	7-Snow-wet
106	46688	18L2	3/9/2018	1687	121	204,127	SALEM	MANUALLY OPENED 80K LINE FUSE P1 SALEM ST - REPAIRS NEEDED AT P16 SALEM ST	Unknown	2-Wind-Strong (32-54 mph)	7-Snow-wet
107	46629	14L1	3/8/2018	1023	1851	1,893,573	PELHAM	14L2 BREAKER LOCKED OUT DUE TO MULTIPLE FALLEN TREES	Tree Fell	2-Wind-Strong (32-54 mph)	7-Snow-wet
108	46677	14L1	3/8/2018	2734	217	593,278	PELHAM	BLOWN 65K FUSE P47 DUTTON RD - BROKEN P20 SPRING - REPLACED 25KVA XFMR - MULTIPLE TREES	Tree Fell	2-Wind-Strong (32-54 mph)	7-Snow-wet
109	46703	14L1	3/9/2018	1740	62	107,880	PELHAM	BLOWN 25KV LINE FUSE P42 JERICHO RD - MULTIPLE TREES ON HILLCREST	Tree Fell	2-Wind-Strong (32-54 mph)	7-Snow-wet
110	46766	14L1	3/10/2018	255	1	255	PELHAM	CREWS MADE REPAIRS TO BROKEN HOUSE SERVICE FROM P3 APPALOOSA	Tree - Broken Limb	2-Wind-Strong (32-54 mph)	7-Snow-wet
111	46767	14L1	3/10/2018	255	6	1,530	PELHAM	REPAIRED SECONDARY WIRES AT POLE 7 APPALOOSA AVE	Tree - Broken Limb	2-Wind-Strong (32-54 mph)	7-Snow-wet
112	42715	14L3	3/7/2018	1985	140	277,900	PELHAM	40 K LINE FUSE OPENED P24 WINDHAM RD * TREE REPAIRS ON SIMPSON RD	Tree Fell	2-Wind-Strong (32-54 mph)	7-Snow-wet
113	42848	14L3	3/7/2018	3674	1158	3,005,552	PELHAM	PTR 704057 LOCKED OUT. MULTIPLE TREE LIMBS ALONG TALLANT RD / MAMMOTH RD	Tree - Broken Limb	2-Wind-Strong (32-54 mph)	7-Snow-wet
114	45943	14L3	3/7/2018	2725	321	874,725	PELHAM	MANUALLY OPENED PTR 704072 DUE TO POLE FIRE @ P38 WINDHAM RD, PELHAM. PHASE OFF PIN	Device Failed	2-Wind-Strong (32-54 mph)	7-Snow-wet
115	46195	14L3	3/7/2018	3786	41	155,226	PELHAM	BLOWN 40K FUSE P86 BRIDGE ST - MULTIPLE TREES/BRANCHES ON BALCOM RD	Tree - Broken Limb	2-Wind-Strong (32-54 mph)	7-Snow-wet
116	46755	14L3	3/10/2018	687	3	2,061	PELHAM	TWO SPANS SERVICE REHUNG FROM P8 SIMPSON RD	Tree - Broken Limb	2-Wind-Strong (32-54 mph)	7-Snow-wet
117	46757	14L3	3/10/2018	1144	1	1,144	PELHAM	SERVICE REHUNG FROM P2-1 KEYES HILL RD	Tree - Broken Limb	2-Wind-Strong (32-54 mph)	7-Snow-wet
118	46810	14L3	3/11/2018	408	28	11,424	PELHAM	BLOWN 25K FUSE P1 CASTLE HILL RD WINDHAM DUE TO LIMB P3 CASTLE HILL RD.	Tree - Broken Limb	2-Wind-Strong (32-54 mph)	7-Snow-wet
119	46848	14L3	3/11/2018	236	1	236	PELHAM	P5 HOBBS RD, CLEARED TREE - REATTACHED SERVICE WIRE	Tree Fell	2-Wind-Strong (32-54 mph)	7-Snow-wet

	ID	Feeder	Date	Duration	CI	CMI	Town	Comments	Cause	Wind	Weather
120	45244	14L4	3/7/2018	2206	131	288,986	PELHAM	PRIMARY DOWN P26 WEBSTER AVE. FUSES OPEN P63 BRIDGE ST.	Tree Fell	2-Wind-Strong (32-54 mph)	7-Snow-wet
121	45245	14L4	3/7/2018	2261	29	65,569	PELHAM	OPEN 25AMP LINE FUSE AT P63 BRIDGE ST / DUE TO PRIMARY DOWN AT P9, P10, AND P11 SURREY LN	Tree - Broken Limb	2-Wind-Strong (32-54 mph)	7-Snow-wet
122	45246	14L4	3/7/2018	2466	185	456,210	PELHAM	MANUALL OPENED LINE FUSE P8 YOUNGS CROSSING RD / DUE TO MULTIPLE TREE CONTACTS	Tree - Broken Limb	2-Wind-Strong (32-54 mph)	7-Snow-wet
123	45248	14L4	3/7/2018	2234	16	35,744	PELHAM	MANUALLY OPENED FUSE FEEDING PLOWER RD / / CAUSE - MULTIPLE TREE CONTACTS	Tree - Broken Limb	2-Wind-Strong (32-54 mph)	7-Snow-wet
124	45250	14L4	3/7/2018	2311	83	191,813	PELHAM	BLOWN 40K SIDE TAP FUSE P49 BRIDGE ST/ TREE ON PRIMARY P3 WHEATON DRIVE /	Tree - Broken Limb	2-Wind-Strong (32-54 mph)	7-Snow-wet
125	45252	14L4	3/7/2018	2450	216	529,200	PELHAM	BLOWN 40 AMP LINE FUSE -P35 BRIDGE ST - DUE TO MULTIPLE TREE CONTACTS IN AREA OF OLD-GAGE AND LEDGE RD	Tree - Broken Limb	2-Wind-Strong (32-54 mph)	7-Snow-wet
126	45253	14L4	3/9/2018	145	114	16,530	PELHAM	3 BLOWN 65K FUSES AT P63 BRIDGE ST PELHAM. TREE AT P80 WEST.	Tree - Broken Limb	2-Wind-Strong (32-54 mph)	7-Snow-wet
127	45254	14L4	3/7/2018	2251	69	155,319	PELHAM	FUSE FEEDING ORCHARD LANE, ST MARGERETS DR OPEN [P1 ORCHARD LANE, PELHAM]. CAUSE: TREES & WIRES DOWN	Tree Fell	2-Wind-Strong (32-54 mph)	7-Snow-wet
128	45991	14L4	3/10/2018	797	1	797	PELHAM	REHUNG SERVICE P49-3 OLD GAGE HILL- TREE LIMBS	Tree - Broken Limb	2-Wind-Strong (32-54 mph)	7-Snow-wet
129	46802	14L4	3/11/2018	162	1	162	PELHAM	SERVICE REATTACHED FROM P14 KENNEDY DR	Tree - Broken Limb	2-Wind-Strong (32-54 mph)	7-Snow-wet
130	45051	18L3	3/8/2018	4027	1	4,027	SALEM	SERVICE RESTORED FROM P36 PELHAM RD	Tree - Broken Limb	2-Wind-Strong (32-54 mph)	7-Snow-wet
131	45405	18L3	3/9/2018	3277	1	3,277	SALEM	NEW SERVICE RUN FROM P40 PELHAM RD	Tree Fell	2-Wind-Strong (32-54 mph)	7-Snow-wet
132	42618	18L4	3/7/2018	625	365	228,125	SALEM	PTR 701187 P47 PELHAM RD LOCKOUT DUE TO FALLEN TREE LIMBS ALONG PELHAM RD. MANUALLY OPENED P21 BRADY AVE - CAUSE: WIRES DOWN P16 BRADY DUE TO TREE	Tree - Broken Limb	2-Wind-Strong (32-54 mph)	7-Snow-wet
133	45075	18L4	3/8/2018	1763	60	105,780	SALEM	BLOWN 40K LINE FUSE P8 LOWELL RD TREE PULLED SERVICE DOWN HOUSE 57 DAISY OFF P6-1 LAUREL.	Tree Fell	2-Wind-Strong (32-54 mph)	7-Snow-wet
134	45110	18L4	3/8/2018	2185	83	181,355	SALEM	BLOWN 40K LINE FUSE P34 LOWELL RD. TREE LIMB FELL ON PRIMARY BETWEEN P34 LOWELL RD AND POLE 1 QUILL LANE	Tree - Broken Limb	2-Wind-Strong (32-54 mph)	7-Snow-wet
135	45251	18L4	3/8/2018	3525	1	3,525	SALEM	RESTORED SERVICE WIRES FROM P15 BRADY AVE	Tree - Broken Limb	2-Wind-Strong (32-54 mph)	7-Snow-wet
136	45256	18L4	3/8/2018	2444	106	259,064	SALEM	BLOWN FUSE P64 BROOKDALE RD AND BRADY AVE LIMBS ON BROOKDALE RD BETWEEN POLES 64-63, 61-2 AND 69-68	Tree Fell	2-Wind-Strong (32-54 mph)	7-Snow-wet
137	45257	18L4	3/8/2018	2336	50	116,800	SALEM	BLOWN FUSE P50 BRADY AVE. LIMBS ON PRIMARY WIRES BETWEEN POLES 51-52. PRIMARY OFF GLASS POLE 75 PELHAM RD. P85 PELHAM RD - TREE ON PRIMARY LINES	Tree Fell	2-Wind-Strong (32-54 mph)	7-Snow-wet
138	45977	18L4	3/10/2018	2406	1	2,406	SALEM	BLOWN 15K TRANSFORMER FUSE P3 SPEARS HILL RD - TREE FELL P3 SPEARS HILL	Tree Fell	2-Wind-Strong (32-54 mph)	7-Snow-wet
139	42758	10L1	3/8/2018	662	890	589,180	SALEM	10L1 CB LOCKED OUT DUE TO TREE ON PRIMARY P32 & P14 POND ST	Tree Fell	2-Wind-Strong (32-54 mph)	7-Snow-wet
140	46652	10L1	3/11/2018	170	1	170	SALEM	REATTACHED SERVICE AND ENERGIZED FROM P19 POND ST	Tree - Broken Limb	2-Wind-Strong (32-54 mph)	7-Snow-wet
141	46836	10L1	3/11/2018	174	1	174	SALEM	LIMB ON SERVICE CLEARED P15 CAROL AVE, SALEM TO HOUSE-TRIPLEX REPLACED	Tree - Broken Limb	2-Wind-Strong (32-54 mph)	7-Snow-wet
142	46770	10L2	3/11/2018	419	1	419	SALEM	RECONNECT SERVICE WIRES P33 LAWRENCE RD, SALEM DUE TO TREE LIMB P33 LAWRENCE RD,	Tree - Broken Limb	2-Wind-Strong (32-54 mph)	7-Snow-wet

	ID	Feeder	Date	Duration	CI	CMI	Town	Comments	Cause	Wind	Weather
143	45044	10L4	3/8/2018	1254	178	223,212	SALEM	BLOWN 65K FUSE AT P1 LINWOOD RD SALEM MULTIPLE TREES AND CONDUCTORS DOWN ON MULBERRY CYPRESS POPLAR RUTH AND CHESTNUT STREETS	Tree Fell	2-Wind-Strong (32-54 mph)	7-Snow-wet
144	45045	10L4	3/8/2018	3526	1	3,526	SALEM	LAWRENCE RD SALEM SINGLE CUSTOMER SERVICE LINE CUT FROM POLE.	Tree Fell	2-Wind-Strong (32-54 mph)	7-Snow-wet
145	45417	10L4	3/9/2018	1607	11	17,677	SALEM	BLOWN 15K TRANSFORMER FUSE P6 CYPRESS ST - TREE FELL - CREW REPLACED 3 SECTIONS OF PRIMARY AND RECONNECTED 4 SERVICES	Tree Fell	2-Wind-Strong (32-54 mph)	7-Snow-wet
146	45468	10L4	3/9/2018	1527	1	1,527	SALEM	REHUNG SERVICE P3 BARBARA	Tree - Broken Limb	2-Wind-Strong (32-54 mph)	7-Snow-wet
147	45502	10L4	3/10/2018	199	2	398	SALEM	SERVICE REHUNG P26 BUTLER	Tree - Broken Limb	2-Wind-Strong (32-54 mph)	7-Snow-wet
148	45992	10L4	3/10/2018	416	1	416	SALEM	REHUNG SERVICE OFF P2 RUTH ST - TREE LIMBS	Tree - Broken Limb	2-Wind-Strong (32-54 mph)	7-Snow-wet
149	46821	10L4	3/11/2018	557	1	557	SALEM	TREE LIMB ON SERVICE FROM P2 ROSEWOOD AVE, SALEM. INSTALLED SERVICE WIRES	Tree - Broken Limb	2-Wind-Strong (32-54 mph)	7-Snow-wet
150	46845	10L4	3/11/2018	312	1	312	SALEM	SERVICE DOWN P12 PATTEE RD DUE TO LIMB. RE-HUNG SERVICE WIRES TO 24 PATTEE RD	Tree - Broken Limb	2-Wind-Strong (32-54 mph)	7-Snow-wet
151	43001	12L1	3/8/2018	484	2	968	WALPOLE	BLOWN 25K LINE FUSE P81 VALLEY ROAD / PRIMARY IN CONTACT WITH NEUTRAL P1 EATON RD DUE TO SNOW	Unknown	2-Wind-Strong (32-54 mph)	7-Snow-wet
152	45170	12L1	3/8/2018	154	1216	187,264	WALPOLE	PTR 741026 P100 WHITCOMB RD, WALPOLE LOCKED OUT. CAUSE: TREE LIMB ACROSS 3 PHASES P119 RIVER RD, ALSTEAD.	Tree - Broken Limb	2-Wind-Strong (32-54 mph)	7-Snow-wet
153	45242	16L5	3/9/2018	826	1	826	LEBANON	BLOWN 15K LINE FUSE P8 DOROTHY PERLEY RD - TREE FELL BETWEEN P8 AND P9 DOROTHY-PERLEY RD	Tree Fell	2-Wind-Strong (32-54 mph)	7-Snow-wet
154	46889	40L1	3/12/2018	65	6	390	CHARLESTOWN	10K TRANSFORMER FUSE / P1 SCENIC-HILL RD / SQUIRREL CONTACT	Animal	2-Wind-Strong (32-54 mph)	7-Snow-wet

THIS PAGE INTENTIONALLY LEFT BLANK

Appendix *G*

Storm Timeline

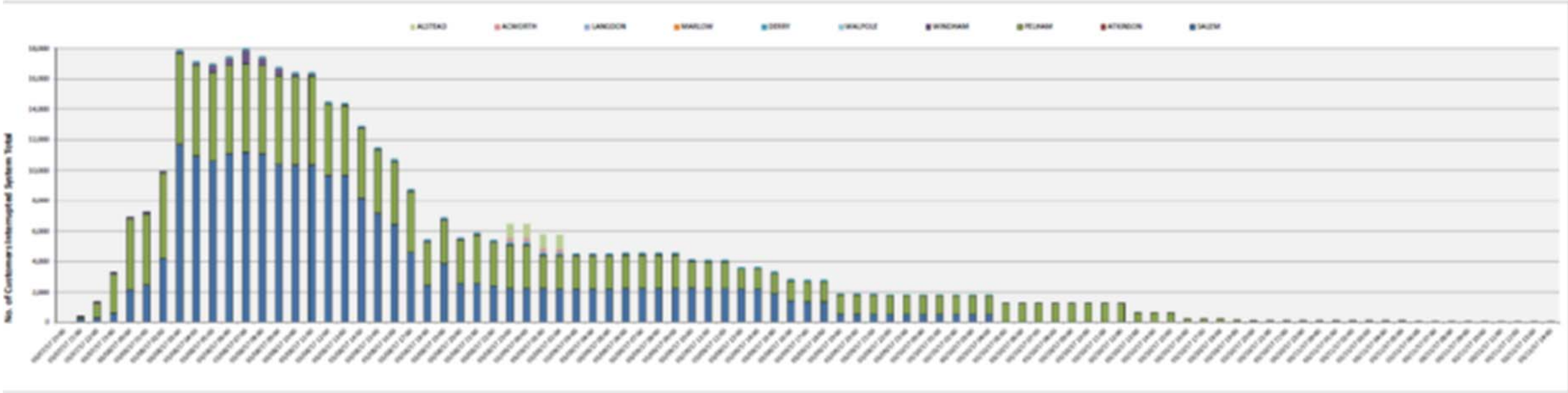

THIS PAGE INTENTIONALLY LEFT BLANK

6. NHPUC Information Requests dated April 6, 2018

6-1. Number of services replaced.
Approximately 15 services were replaced as a result of Storm Quinn. These numbers may change as review of storm charges continue. There were approximately 80 services that required to be disconnected so that customer repairs could be made and later inspected. Several other services were required to be re-hung or reconnected after extensive damage from fallen trees or limbs. There were 320 reported wires down from the primary and secondary.

6-2. Amount of secondary wire replaced (in feet).
Approximately 1,800 feet of secondary wire was replaced as a result of Storm Quinn.

6-3. Amount of primary wire (in feet, indicating size and I ph, 2ph, 3ph, mainline).
Several sections of primary wire throughout the southern NH territory needed to be reconnected or re-hung due to the extensive amount of fallen trees and tree limbs in the area. Several of these sections required a minimal amount of primary wire added to splice the conductors back together. It is unknown at this time the amount of primary wire that was used for these efforts but as review of storm charges continue more details will be available. There were 320 reported wires down from the primary and secondary.

6-4. Number of transformers replaced.
Two.

6-5. Number of poles replaced.
Eleven.

6-6. Number of cross arms replaced.
Eleven.

6-7. Number of environmental impact events.
One.

6-8. Restoration costs (indicate if finalized or estimated to date).
Estimated to date is $1.15 million.

6-9. The peak number of customer without power by date and time, including an hourly spreadsheet of the number of customers without power per town throughout the duration of the storm.
The peak number of customers without power was 17,998, which occurred on March 8th between the hours of 0600 and 0700. During the peak of the storm approximately 85% of the southern New Hampshire territory was without power.

This storm is the second worst storm event for Liberty since the PUC began tracking major events. Total customers impacted by Storm Quinn in the Salem Area by Town are as follows: Atkinson (100% interrupted); Salem (81% interrupted); Derry (100% interrupted); Windham (99% interrupted); and Pelham (98% interrupted). 99% of all customers interrupted were restored by March 10th at 1900 hours or about 3 days after the storm began.

6-10. Detailed discussion and timeline of executed restoration and how the order of restoration compares with the 2017 Liberty Utilities Emergency Response Plan restoration prioritization.

Outage restoration was executed in accordance with Liberty's Electric Emergency Management Plan Appendix I - Restoration of Service. The Plan reads as follows:

Emergency work is done and service is restored generally in the order of priority below:

1. Live Wires and Extreme Hazards
2. Transmission
3. Substations
4. Critical Facilities
5. Life Support Customers
6. Primary Circuits
7. Secondary Circuits
8. Final Circuit Sweep
9. Permanent Repairs
10.

At the recent Municipal Meetings, the Company explained the restoration steps in Quinn as follows:

1. Life Safety – Top Priority is always the life safety of the public & employees
2. Electric Infrastructure: Sub-Transmission lines/substations: Transmission Lines in New Hampshire supplying Liberty Utility Substations are owned by National Grid.
3. Utility Defined Critical Facilities: Hospitals, police/fire stations, water supply, sewage treatment facilities (identified by Municipal Officials)
4. Circuit Backbones: Main line distribution circuits which feed lateral lines
5. Lateral Feeders: Large blocks of customers and/or whole neighborhoods, largest number of customers in the minimum amount of time
6. Transformers/Secondary Circuits
7. Individual House Services

6-11. Peak number of restoration crews (excluding damage assessors and tree crews) that were on the system at one time.

Liberty Utilities had:

- 9 Company restoration crews

- 8 on-property contractor crews
- 15 NAMAG crews

Contractor crews worked during day-time hours.
Company crews were split between day-time and night-time to provide 24 hour coverage.

6-12. A detailed discussion and associated timeline should be provided that describes the number of crews on the system prior to the storm, the number of crews planned for and needed for storm restoration efforts, all outgoing attempts to attain additional contractor or mutual aid crews, the number of crews offered by other contractors and utilities throughout the restoration event, and when crews were in New Hampshire and accepted by Liberty.
On Monday morning, the Incident Commander began securing Company and on-property contractor crews. Liberty Utilities had released contractor crews to assist a utility in another state during Winter Storm Riley. Liberty Utilities requested that they be returned ready to work by Wednesday morning. On Tuesday morning, the Company requested 10 line crews and 10 tree crews through NAMAG. However, none were available. On Tuesday afternoon, the Company informed the NHPUC Safety Division. On Thursday morning, the NHPUC Safety Division informed the Company that there were Canadian crews available from the NHEC. The Company contacted NHEC and NAMAG, but could not confirm this. On Thursday afternoon, the Company secured line crews from Evansville, Indiana, and Madison, Wisconsin, and tree crews from National Grid. A short time later, the Company secured crews from Vermont and canceled the Indiana and Wisconsin crews once we learned they were tree crews only. On Friday morning, the Company secured line crews from PSNH, Unitil, and NHEC. Initially, the Company turned down the Unitil and NHEC crews but reconsidered within the hour after the supervision, field coordination, and safety concerns were resolved. The Company informed the NHPUC Safety Division. The crew counts were provided in the filed reports. As it turned out, the crews provided by Unitil were the Canadian crews.

6-13. Detailed discussion of storm event level planning prior to the storm with respect to line resource requirements, existing in-house line resource deficiencies, and external line contractors required.
As with all potential electric events, before the initial call with the 60 invitees, there is a smaller call with Senior Management and Electric Operations. Appendix H of the Electric Emergency Plan contains a 3 Day Checklist. Items are discussed as necessary.

This smaller call or in-person meeting is generally held at the earliest notice of pending inclement weather. Because of the back to back to back storms Riley, Quinn, and Skylar, there were multiple opportunities to discuss available resources from an offering, holding, and requesting point of view.

6-14. Date, time, and location of the first customer who lost power associated with the storm and the date, time, and location of the last customer who had power restored associated with the storm.

First customers to lose power as a result of Storm Quinn occurred at 2141 hours on March 7 in the Zion Hill Area of Salem. The last customer to be restored occurred on March 11 at 1400 hours in the Castle Hill Rd Area of Windham.

6-15. A timeline of when and where the first-level damage assessment was initiated, entered into the OMS, and completed, including the quantity of resources utilized in the field, non-storm (day to day) roles of those field personnel assessing the damage, years of electric utility damage assessment experience; indicate which assessors had multiple roles within the Incident Command System.

Electric Operations personnel began damage assessment as soon as the first customers began to lose power on Wednesday evening. Those personnel with storm assignments in damage assessment began working early on Thursday morning. Both groups continued until Sunday morning.

The Damage Assessment responsibilities and procedures are detailed in Appendix J of the Electric Emergency Plan. Those personnel assigned to Damage Assessment can be found in the documents contained in *Appendix E* of this report.

6-16. The process followed by damage assessors and the Damage Assessor Coordinator during the Company's phase 1 assessment and any applications or equipment that were utilized to expedite the assessment of damage through the OMS, including the use of any mobile applications or other non-paper process.

The damage assessors followed the procedures detailed in Appendix J of the Electric Emergency Plan.

6-17. Detailed discussion, including times and duration, regarding any problems experienced with the company's OMS system, website outage map, website crew assignment, and outage reporting including attempts to repair problems during the event.

Initially, the amount of incoming customer calls caused the OMS system to predict upstream devices from actual affected devices. This resulted in higher predicted interruptions being reported in the website outage map. After updating the prediction mode in the system, Liberty was able to correct these reported amounts and the management of incidents in the OMS system improved.

During the latter stage of the storm some incidents had to be re-created to reflect accurate customer counts in the system. This caused the customer counts to increase temporarily in the outage map as these incidents were recreated and managed through completion. This issue took several hours to correct.

The outage management system had issues with reporting hazards (wires down; tree/limbs) due to an unknown bug in the system with unknown regions. This caused the wires down to be managed and tracked manually by the wires down team. This issue has since been resolved

6-18. Details of any discussions Liberty had with Town of Salem officials, such as Emergency Directors or First Responders, regarding the provision of electric power to mitigate the need for an emergency shelter to be opened.
Liberty Utilities opened its Municipal Contact Center on March 7 at noon. Fire Chief/EMD Paul Parisi and Assistant Chief Lawrence Best came to the Company's office twice a day throughout the restoration to discuss road closures and public safety.

On March 8, the Company reviewed the priority customers that had no power, as well as neighborhoods without power, and the estimated restoration times. Areas that were able to be restored through switching were identified, as were areas that would remain out overnight. Due to the large amount of outages in Salem and the estimated restoration times, the Town officials decided to open a shelter at the Ingram Senior Center on March 8 at 7 p.m. The Company kept the Town officials abreast of the areas that were restored on an ongoing basis.

The Company received 113 Priority 2 (Hindering Emergency Operations) calls during the Storm. Included were 14 "Wires Down" alerts through the iRestore App, which were submitted via local Fire and Police Personnel. During restoration of the storm, Liberty Utilities met regularly and worked closely with different chiefs of emergency personnel from different towns to discuss road closures and prioritization of restorations.

Note that on March 29, 2018, the Company hosted its annual Municipal Meetings as required by NH Puc 306.09. One agenda item was how the Company restores power to customers after a storm. The Company validated the Town of Salem's critical infrastructure listing. The NHPUC Safety Division declined the Company's invitation to attend so the Company forwarded a copy of the presentation to the Safety Division after the meeting.

6-19. Detailed discussion of Liberty's attempts to facilitate restoration with National Grid of the 23kV supply line originating at Pie Hill in Methuen and providing power to the Spicket River substation.
The loss of the National Grid 23kV-2376 Supply Line to Spicket River occurred on March 8 at approximately 3:50 a.m. Initially, National Grid indicated that the loss of supply was due to issues with the 115kV source at their Ward Hill substation. Liberty was not aware there was another issue, trees on primary, on the 23 kV Supply line until the morning of March 9 when a helicopter patrol was performed. Liberty immediately dispatched tree crews to address this issue. Liberty had performed a foot patrol of a portion of the 23 kV right of way and no tree hazards were identified at the time.

Throughout the duration of this outage, both Liberty Storm Room personnel and Liberty Control Room personnel were in contact, via phone, with National Grid regarding expected restoration of supply lines. Liberty Control Room personnel contacted both National Grid's Distribution and Transmission Control Rooms requesting updates. Liberty Storm Room Personnel contacted National Grid's Transmission Account Management Team regarding this outage and expected restoration.

6-20. The Commission's understanding is that the restoration of that substation feed would significantly restore the affected circuits out of the Spicket River substation and shorten outage durations in the North Main Street and Main Street areas accordingly.
The Commission is correct.

6-21. Discussion of restoration efforts coordinated with National Grid, including switching attempts employed by Liberty to restore power within Liberty's distribution system in lieu of National Grid's prolonged restoration efforts, with associated dates and times of each step of switching.
On March 8 at approximately 11:30 a.m., a portion of the 13L2 feeder was restored via the Salem Depot 9L3 feeder. On March 8 at approximately 4 p.m., the Spicket River 13L3 feeder was restored via the Olde Trolley 18L2 feeder. Restorations of the Spicket River feeders were delayed due to multiple lockouts in the adjacent areas which also prevented further restorations of these feeders.

6-22. Discussion should include a description of the Liberty circuits involved in potential switching, significant customers on those circuits, and the date and time when power was finally restored to the Spicket River substation.
See the response to Number 21 for a portion of this response. The 2376 Supply Line was restored on March 9 at approximately 2 p.m.

6-23. Include any communications with National Grid and all memoranda of understanding or efforts that have been memorialized to date regarding actions with National Grid to minimize outage durations associated with future interruptions of this line.
There are no known communications or memoranda.

6-24. List the names and roles of each employee (normal positions/titles), their roles within the Incident Command System, and the number of years of their experience within the role assigned.
The employees with roles within the ICS as of March 5, 2018, are listed on the documents in *Appendix E.* These documents are updated after each Event. The start and end dates of the assignments are not tracked. Day One for Liberty Utilities was July 3, 2012. Therefore, everyone on the list has less than six years' experience in their assignment as Liberty Utilities personnel. Some however bring experience from other utilities.

Additionally, there has been some turnover in the ICS assignments due to some individuals not meeting the Company expectations.

Nonetheless, as a result of drills, tabletop exercises, and actual events over the past six years, all assigned employees have an understanding of their roles.

See the table below:

	Drills	Table Top Exercises	Municipal Meetings	Actual Events
2018			March 28 – Lebanon March 29 - Salem	Jan 3-4: Snow (Grayson) Feb 6-7: Snow (Liam) Mar 2-3: Wind (Riley) Mar 7-11: Snow (Quinn) Mar 13-14: Snow (Skylar) Mar 20-22: Snow (Toby) Apr 4-5: Snow (Wilbur)
2017	August 30		April 11 - Concord	Jan 23-24: Wind/Snow Feb 8-9: Snow Feb 10-12: Snow (Orson) March 13-15: Snow (Stella) March 30-April1: Snow June 19: Thunderstorm Oct 30-31: Wind Dec 24-25: Ice
2016	May 24 (NAMAG) Aug 17 (NAMAG)	November 28 March 31 (NGRID-Transmission)	April 5 – Salem April 12 - Lebanon	January 20: Wind/Snow February 4-5: Snow February 15: Snow March 19: Wind/Snow April 3: Wind/Snow Sept 9: Wind/Rain October 6: Hurricane (Matthew) December 28-29: Snow
2015	December 9	December 15	March 27 - Lebanon March 30 - Londonderry	January 2-4: Ice/Snow January 26-27: Ice/Snow February 1-2: Ice/Snow February 13-15: Ice/Snow February 21-22: Ice/Snow October 2: Hurricane December 28-29: Ice/Snow
2014		July 23	March 4 - Lebanon March 5 - Salem	December 8-10: Ice/Snow November 23-28: Ice/Snow
2013			January 29 - Lebanon January 31 - Salem	February 8-10: Blizzard (Nemo)
2012	July 30			October 29-31: Hurricane Sandy

6-25. Identify those employees that hold multiple roles within the Incident Command System.

As shown on the documents in *Appendix E,* most ICS Positions have a Primary, Secondary, and Backup. In some limited situations, a Primary in one position may act as a Backup in another position. For example, once an individual completes their Onboarding Assignment, they may be able to act as a Field Guide.

6-26. Compare and contrast the differences in preparation that Liberty undertook for the prior Northeaster (Coastal Storm "Riley") that occurred on March 2 and 3, 2018, and Winter Storm "Quinn."

As shown in the table below, the storms were not comparable.

Nonetheless, the Company conducted its initial internal storm preparation call and followed the three documents similar to those in *Appendix E.* Once the storm's impact was known, the remaining calls were canceled.

Subject	Riley	Quinn
Dates	March 2 - 3	March 5 - 11
Weather Forecast	Hazardous Weather Outlook	Winter Storm Warning
Type Event	4	2
Planning Reports Issued	1	11
Internal Storm Calls	1	9
NAMAG Storm Calls	3	9

6-27. Include weather event indices used for both storms and note any factors that should be considered when reviewing each storm.

See the above table. From the National Weather Service:

Hazardous Weather Outlook

The Hazardous Weather Outlook will describe potential hazardous weather and hydrologic information of concern in Days 1 through 7.

The outlook contains two segments: One segment for the marine zones and adjacent land-based (i.e., coastal) zones and the other segment for the rest of the land-based zones. Each segment of the HWO will contain 3 sections: short term through Day 1, long term for Days 2-7, and spotter information.

Winter Storm Watch

A Winter Storm Watch is issued when there is the potential for significant and hazardous winter weather within 48 hours. It does not mean that significant and hazardous winter weather will occur...it only means it is *possible*.

Significant and hazardous winter weather is defined as a combination of:
1) 5 inches or more of snow/sleet within a 12-hour period **or** 7 inches or more of snow/sleet within a 24-hour period
AND/OR
2) Enough ice accumulation to cause damage to trees or powerlines.
AND/OR
3) a life threatening or damaging combination of snow and/or ice accumulation with wind.

The snow/sleet criteria for a Winter Storm Watch for the five westernmost counties (Allegany, Mineral, Grant, Pendleton, and Highland) is higher (6 inches or more within a 12-hour period; 8 inches or more within a 24-hour period).

6-28. Please include any other metrics normally included by Liberty within its internal self-assessments.

See Section 2 Overview of Storm.

Barron Ave Station - No 10 - OneLine

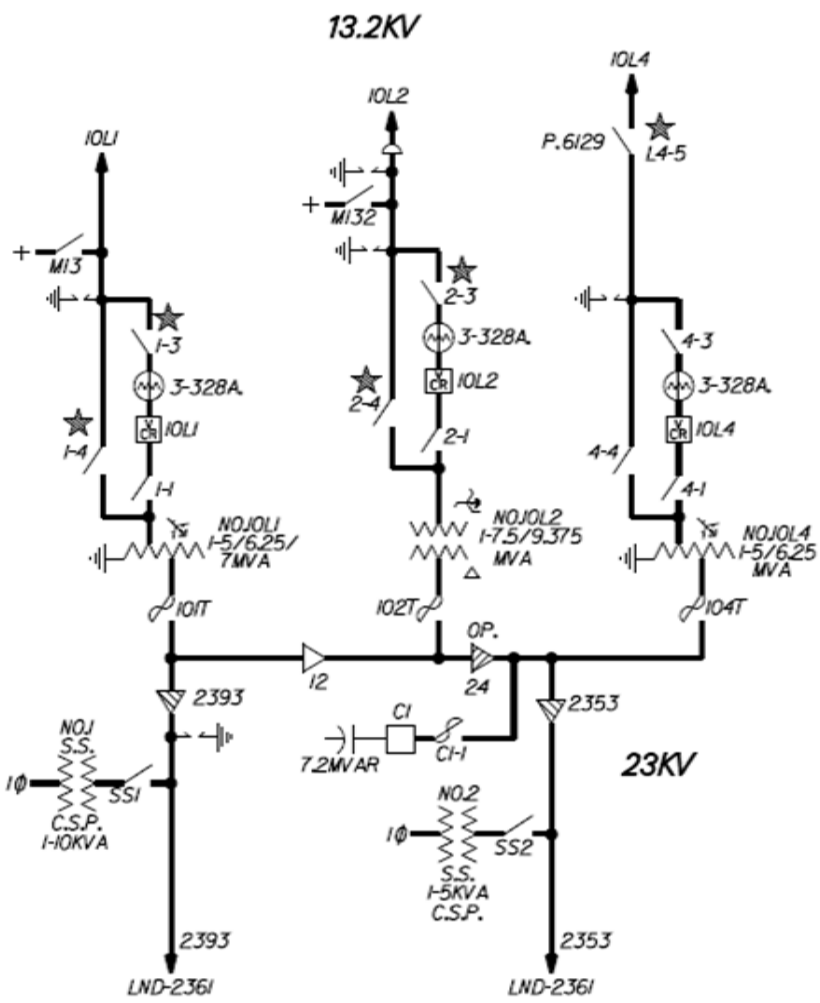

Major Equipment	Average Station Equipment Age 2019
23-13.2 kV Transformer	41
13.2 kv Recloser/Breaker	37
Regulator - Phase A	29
Regulator - Phase B	29
Regulator - Phase C	29

Comments
1 - 10L4 Recloser is at End of Life - No longer supported
2 - 10L4 Regulators are at End of Life - Contact wear, operations by phase -A over 421,000, B over 542,000, C over 559,000 - Live part height does not meet current mimimum requirements
3 - 23 kV Airbreak Switches are near End of Life - minimum age 50 years
4 - 10L1 Recloser Model has a higher than normal failure rate
5 - 10L1 Regulators are nearing End of Life - Contact wear - B phase over 270,000 operations, C phase over 195,000 operations
6 - 10L1 Transformer is 57 years old (as of 2006 - 2 of 31 have failed @ NGRID)
7 - 10L1 Transformer bushings have high power factor
8 - 10L4 Transformer is 48 years old (as of 2006 - 5 of 28 have failed @ NGRID)

Feeder	Major Equipment	Equipment Age	Nameplate Rating	Operation Counter 12/31/2019	Comments
10L1	23-13.2 kV Transformer	57	5/6.25/7 MVA		Transformer is 57 years old (as of 2006 - 2 of 31 have failed @ NGRID) Transformer bushing have high power factor
	13.2 kv Recloser	45	560 A, 15.5 kV	702	Recloser Model has a higher than normal failure rate
	Regulator - Phase A	31	7.62 kV, 328 A, 250 kVA	129,148	
	Regulator - Phase B	31	7.62 kV, 328 A, 250 kVA	272,517	Regulator nearing End of Life - Contact wear - B phase over 270,000 operations
	Regulator - Phase C	31	7.62 kV, 328 A, 250 kVA	198,762	Regulator nearing End of Life - Contact wear - C phase over 197,000 operations
10L2	23-13.2 kV Transformer	19	7.5/9.375 MVA		
	13.2 kv Recloser	16	560 A, 15.5 kV	110	
	Regulator - Phase A	18	7.62 kV, 328 A, 250 kVA	156,376	
	Regulator - Phase B	18	7.62 kV, 328 A, 250 kVA	98,573	
	Regulator - Phase C	18	7.62 kV, 328 A, 250 kVA	156,810	
10L4	23-13.2 kV Transformer	48	5/6.25 MVA		Transformer is 48 years old (as of 2006 - 5 of 28 have failed @ NGRID)
	13.2 kv Recloser	50	560 A, 15.5 kV	18	No Longer Supported - High Failure Rate
	Regulator - Phase A	38	7.62 kV, 328 A, 250 kVA	422,521	10L4 Regulator at End of Life - Contact wear, operations phase A over 421,000 - Live part height does not meet current mimimum requirements
	Regulator - Phase B	38	7.62 kV, 328 A, 250 kVA	582,024	10L4 Regulator at End of Life - Contact wear, operations phase B over 542,000 - Live part height does not meet current mimimum requirements
	Regulator - Phase C	38	7.62 kV, 328 A, 250 kVA	560,657	10L4 Regulator at End of Life - Contact wear, operations phase C over 559,000 - Live part height does not meet current mimimum requirements

Salem Depot - No 9 - OneLine

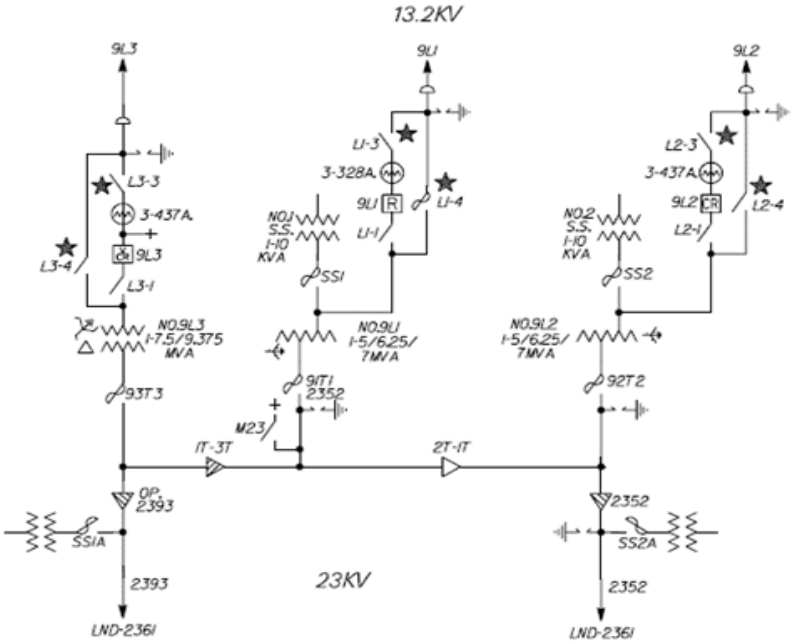

Major Equipment	Average Station Equipment Age 2019
23-13.2 kV Transformer	49
13.2 kv Recloser/Breaker	41
Regulator - Phase A	25
Regulator - Phase B	26
Regulator - Phase C	19

Comments
1 - 9L1 Transformer - 51 years old
2 - 9L1 Oil Circuit Breaker - 68 years old
3 - 9L2 Recloser - 43 years old
4 - 9L2 Phase C Regulator Needs internal motor capacitor repair - untanking required
5 - 9L3 Transformer H3 bushing needs to be replaced due to poor power factor, Oil Temperature gauge needs to be replaced - Transformer 30 years old

Feeder	Major Equipment	Equipment Age	Nameplate Rating	Operation Counter 12/31/19	Comments
9L1	23-13.2 kV Transformer	51	5/6.25/7 MVA		
	13.2 kv Recloser/BKR	68	600 A, 14.4 kV	995	Oil Circuit Breaker Electromechanical relay
	Regulator - Phase A	10	7.62 kV, 437 A, 333 kVA	218,064	
	Regulator - Phase B	10	7.62 kV, 437 A, 333 kVA	12,813	
	Regulator - Phase C	10	7.62 kV, 437 A, 333 kVA	124,787	
9L2	23-13.2 kV Transformer	65	5/6.25/7 MVA		
	13.2 kv Breaker	43	800 A, 14.4 kV	737	
	Regulator - Phase A	19	7.62 kV, 437 A, 333 kVA	102,758	
	Regulator - Phase B	22	7.62 kV, 437 A, 333 kVA	149,906	
	Regulator - Phase C	16	7.62 kV, 437 A, 333 kVA	129,485	Needs internal motor capacitor repair - untanking required
9L3	23-13.2 kV Transformer	30	7.5/9.375 MVA		Transformer H3 bushing needs to be replaced due to poor power factor, Oil Temperature gauge needs to be replaced
	13.2 kv Recloser	13	800 A, 15.5 kV	48	
	Regulator - Phase A	47	7.62 kV, 437 A, 333 kVA	198,321	
	Regulator - Phase B	47	7.62 kV, 437 A, 333 kVA	227,398	
	Regulator - Phase C	32	7.62 kV, 437 A, 333 kVA	207,229	